PG-L1-Q2 3 m x 3 m



01/2024-V01

PRIMEYARD®

PG-L1-Q2 3 m x 3 m

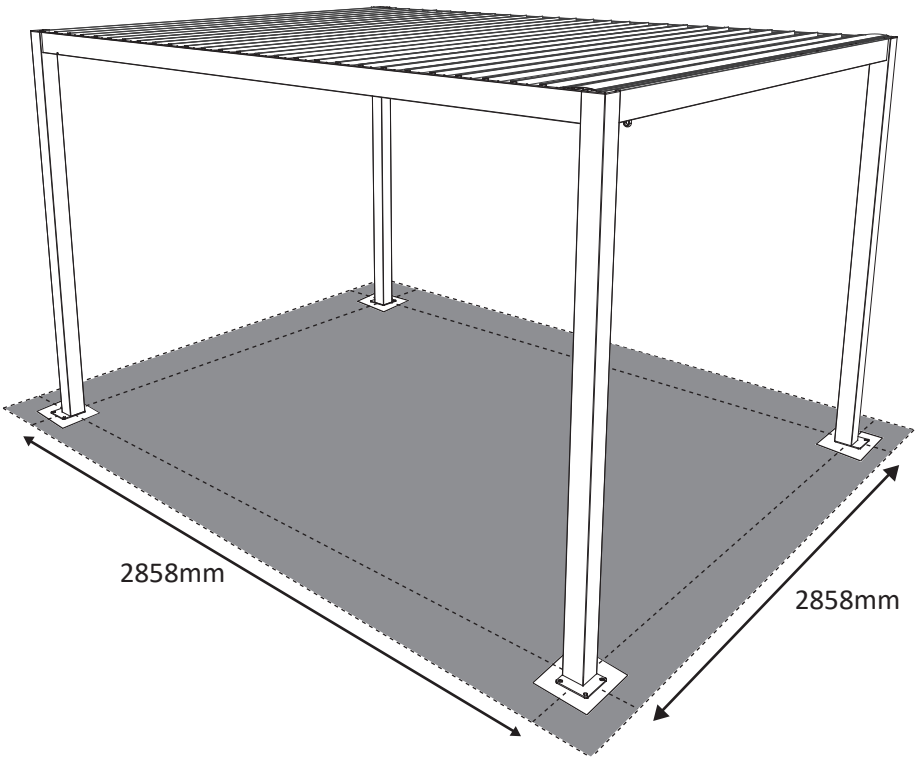

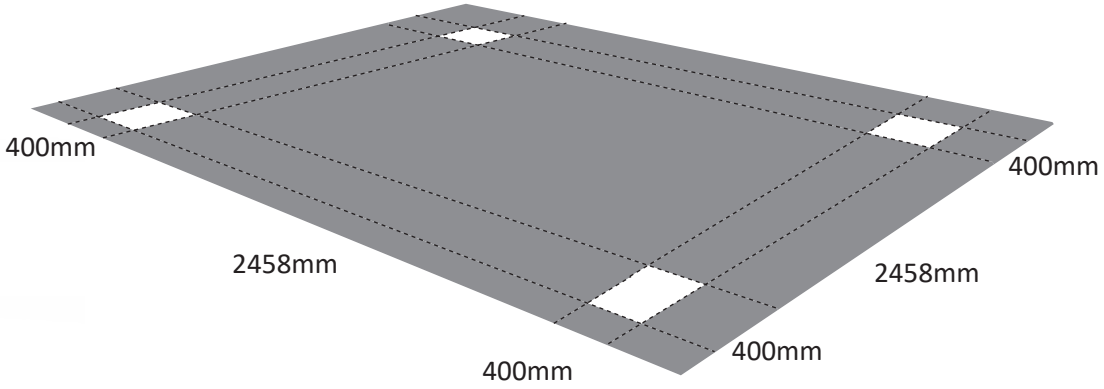

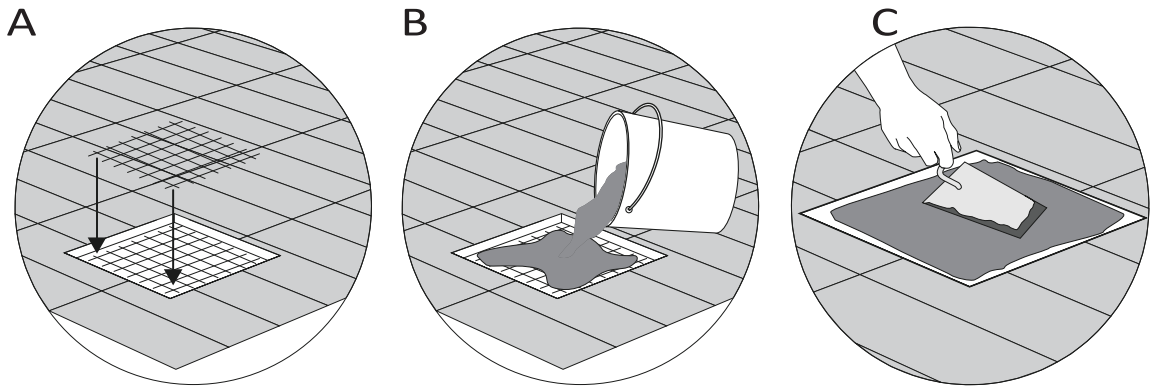

PG-L1-Q2 3 m x 3 m

A

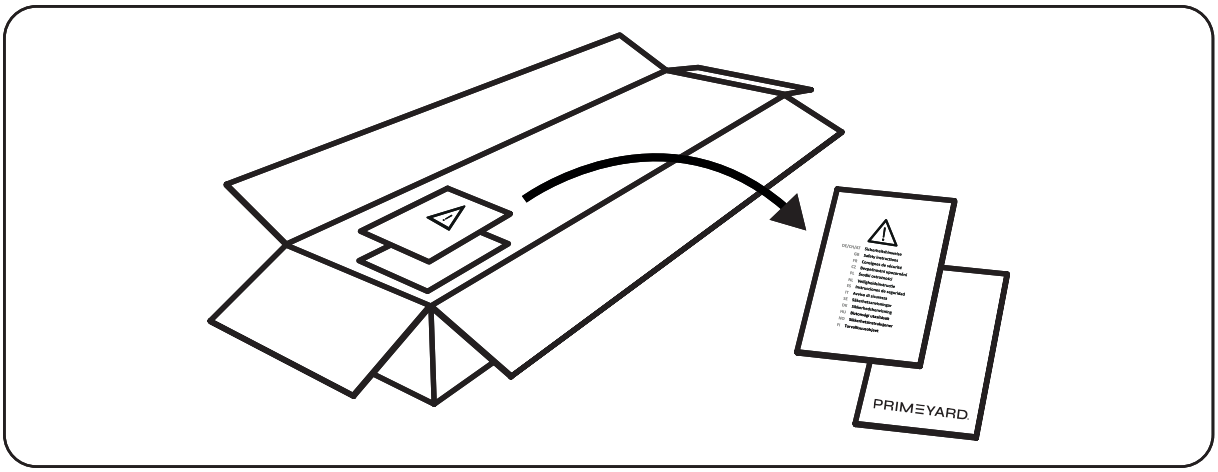

B

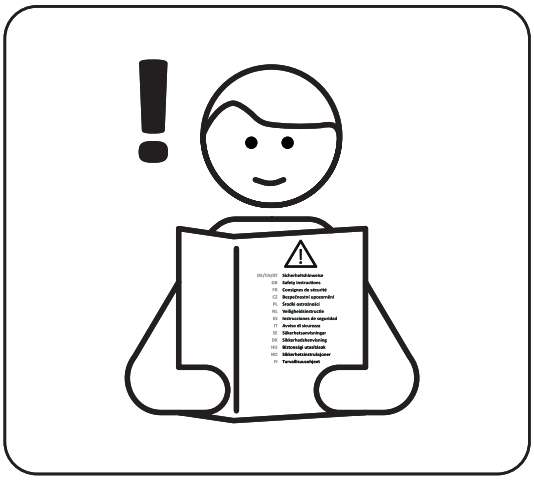

C

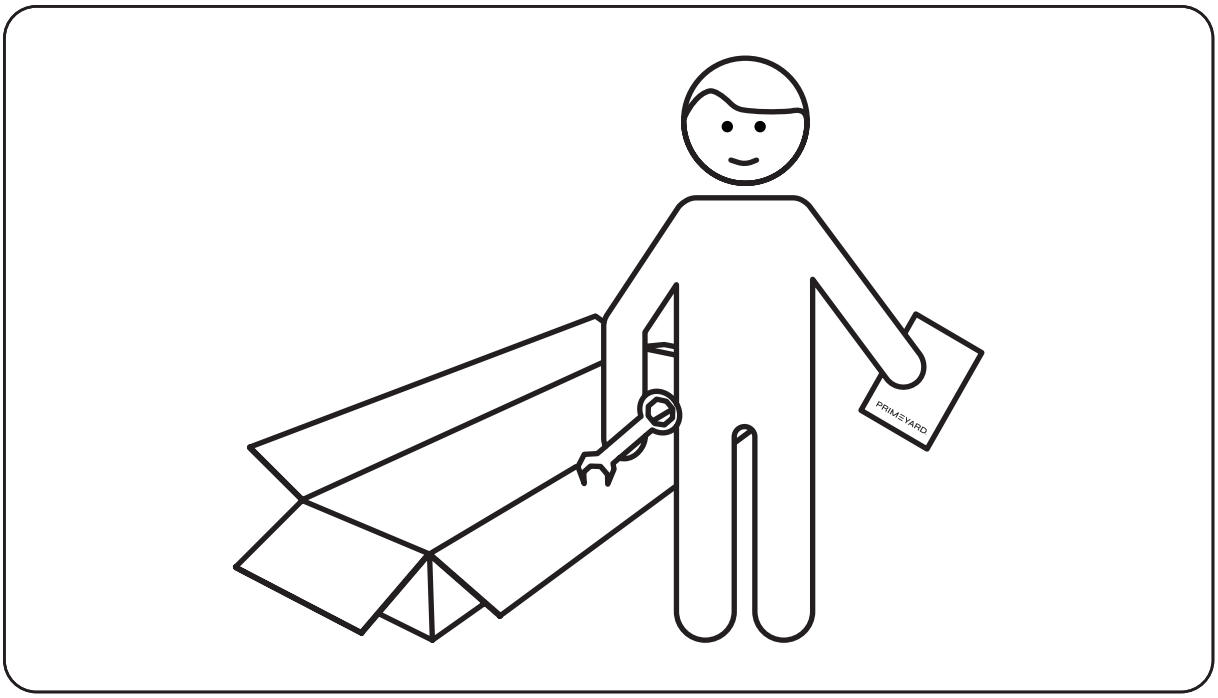

PG-L1-Q2 3 m x 3 m

Item no.		Q'ty
39835	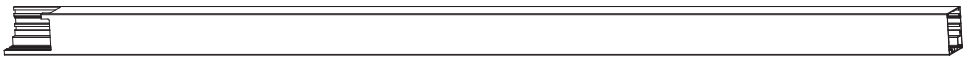	4
39862	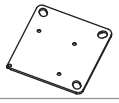	4
39841		1
39842		1
39837		1
39838	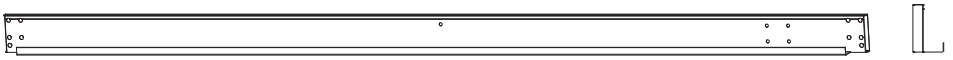	1
39871		1
39872		20
39864	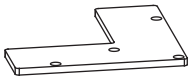	2
39865	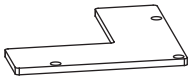	2
39861	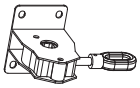	1
39869		1
39870		1
39728		1
39867	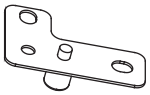	1
39868	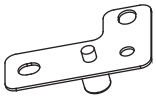	1
39873		1

PG-L1-Q2 3 m x 3 m

Item no.		Q'ty
35085	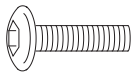 M6*15MM	16
39743	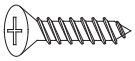 M5*25MM	16
39744	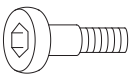 M6*10MM	2
35137	 M10*80MM	12
39745	 M5*15MM	12
39742	 M6	2
35086	 M6	18
39738	 M8	2
35144	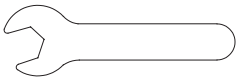	1
35146	 M4	1
35145	 M4	1
39715	 M3	1
39739	 M6	1
39740	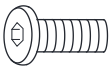 M5*8MM	80
39746	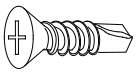 M4*15MM	2
39741		1
39829		48
39987	 M6	1

PG-L1-Q2 3 m x 3 m

1

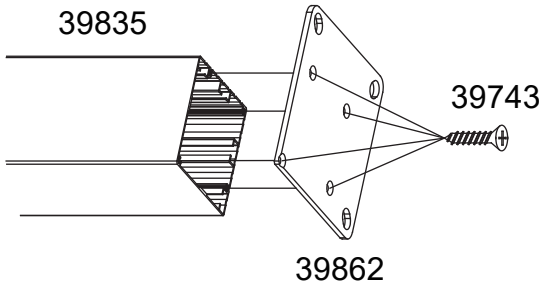

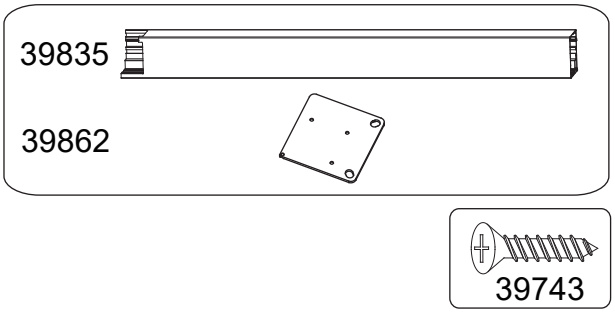

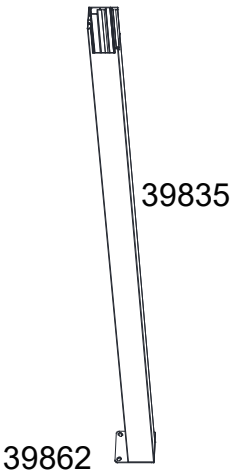

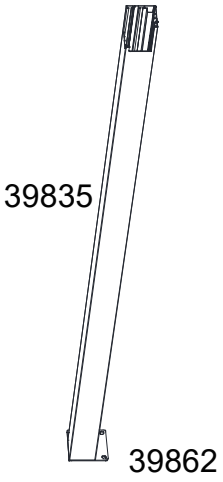

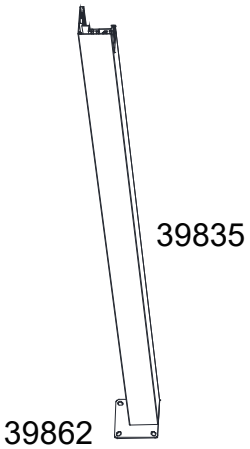

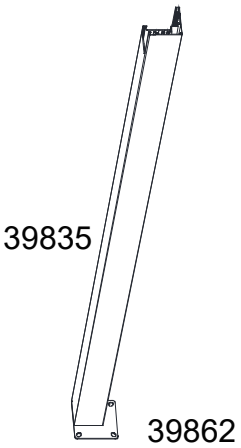

PG-L1-Q2 3 m x 3 m

2

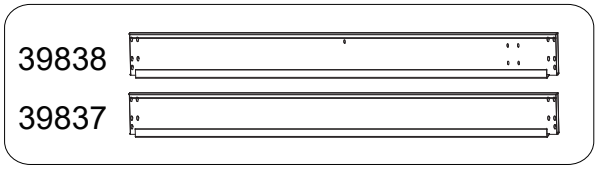

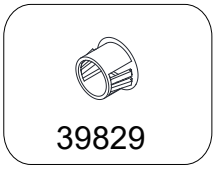

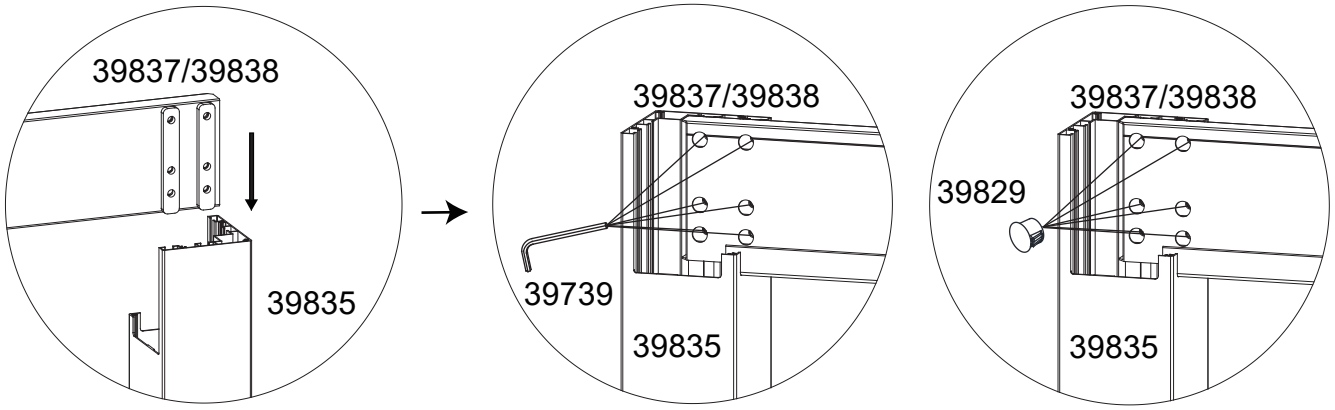

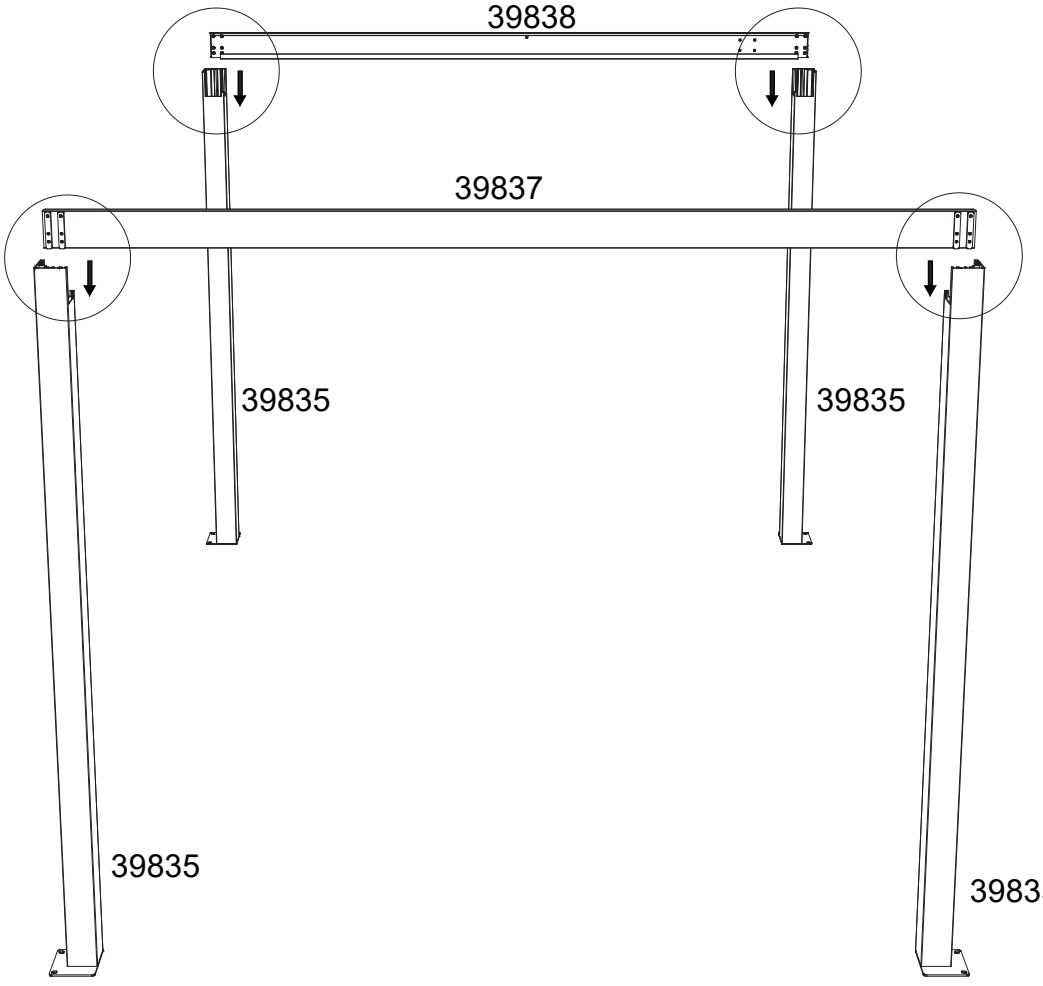

PG-L1-Q2 3 m x 3 m

3

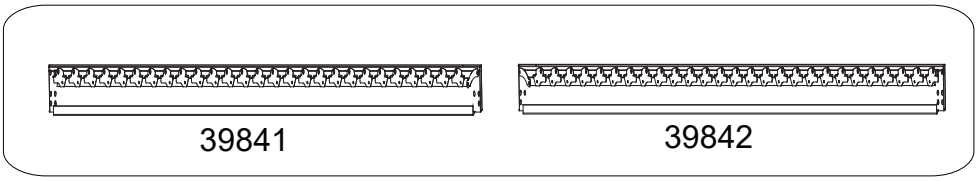

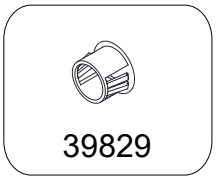

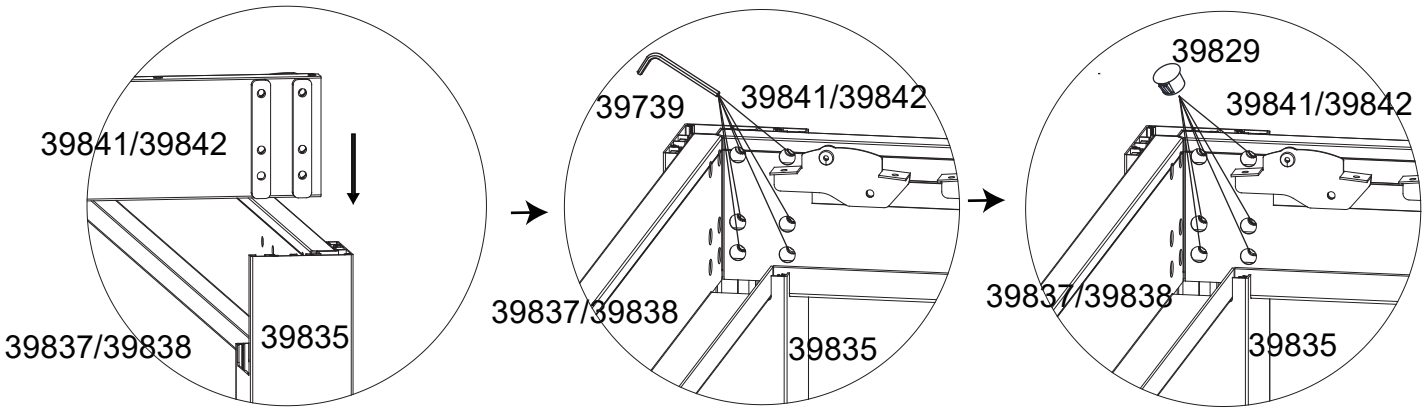

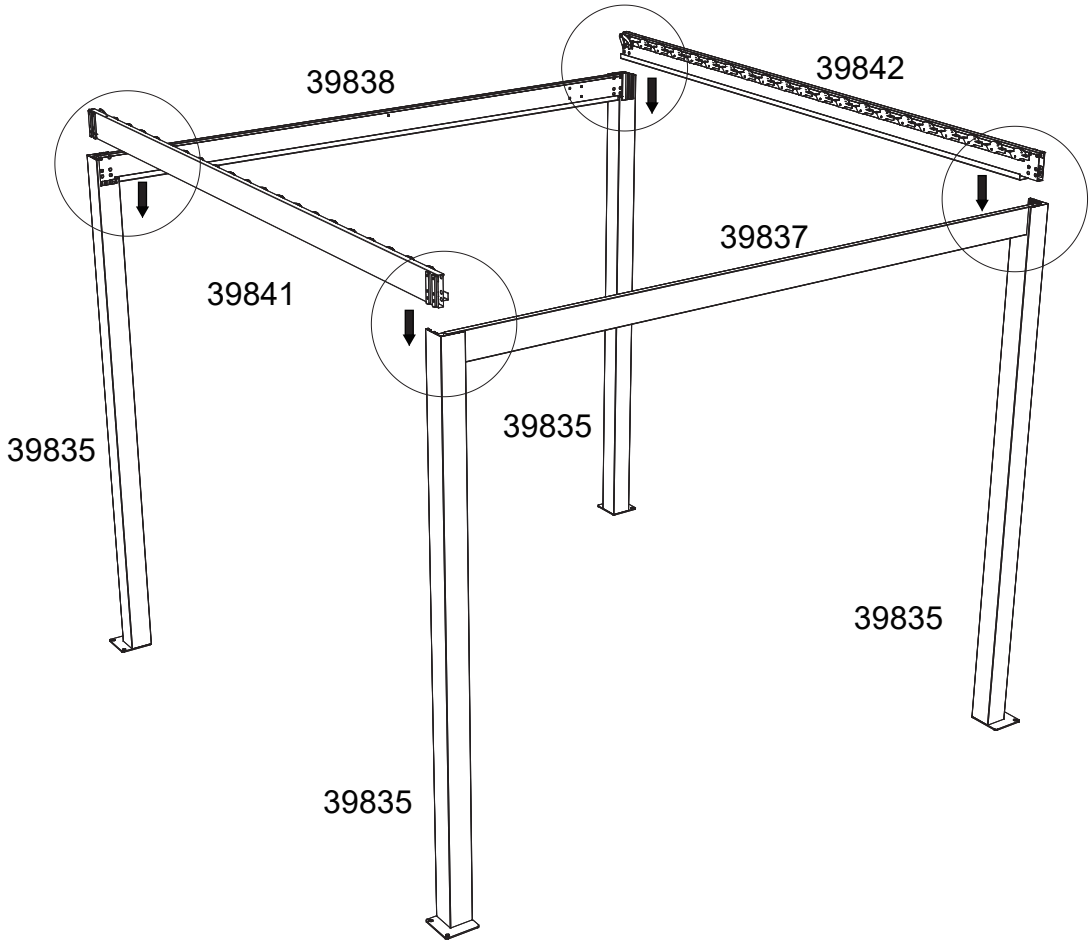

PG-L1-Q2 3 m x 3 m

4

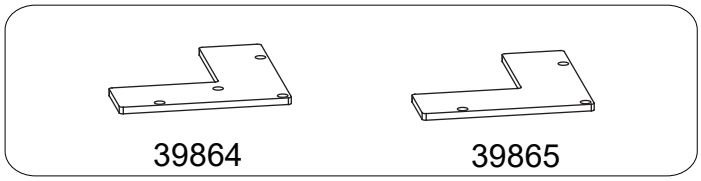

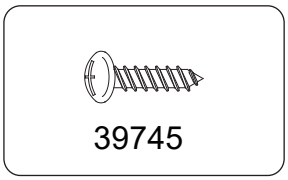

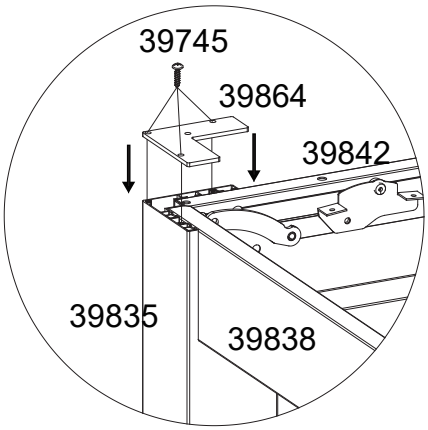

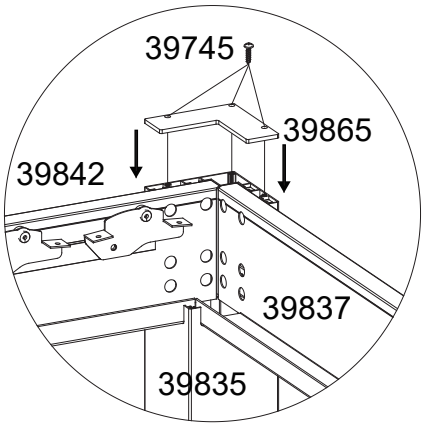

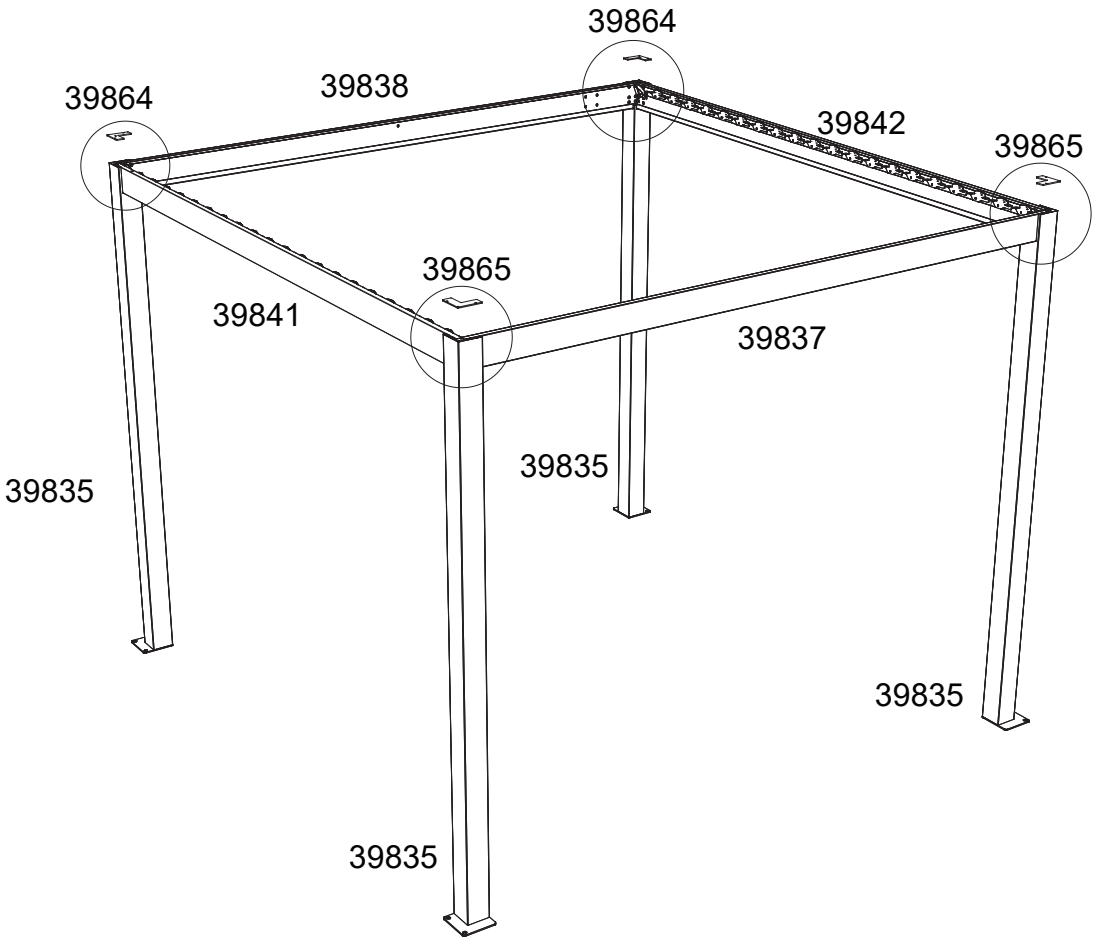

PG-L1-Q2 3 m x 3 m

5

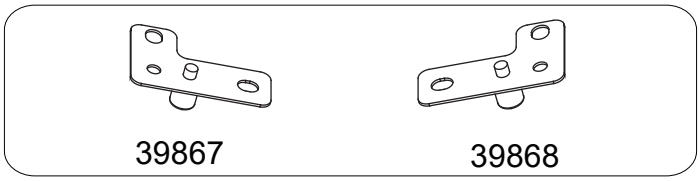

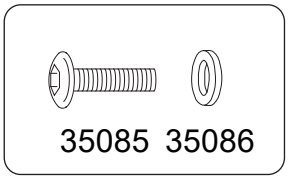

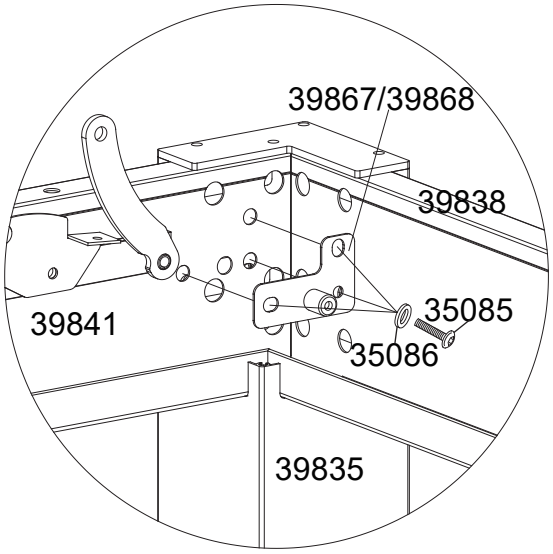

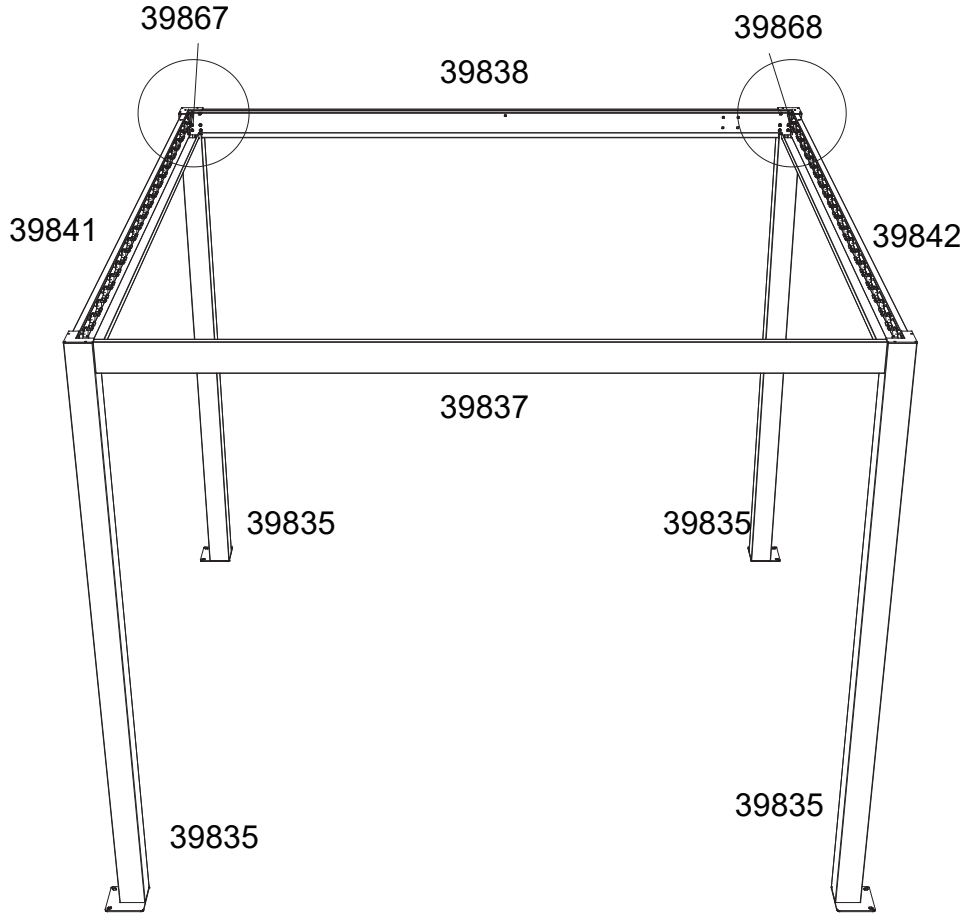

PG-L1-Q2 3 m x 3 m

6

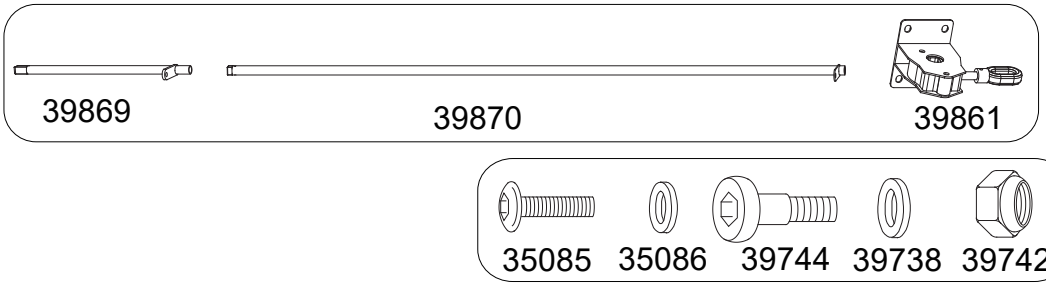

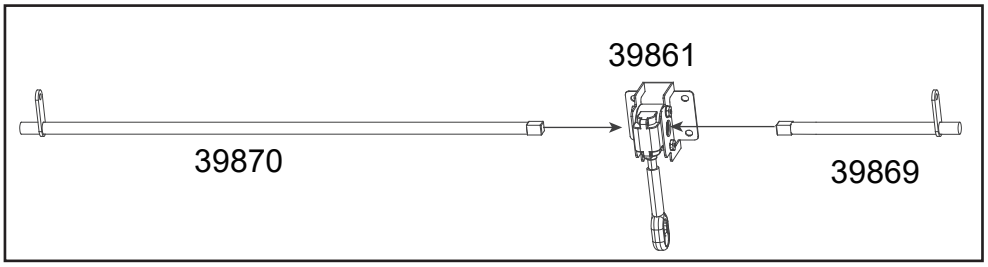

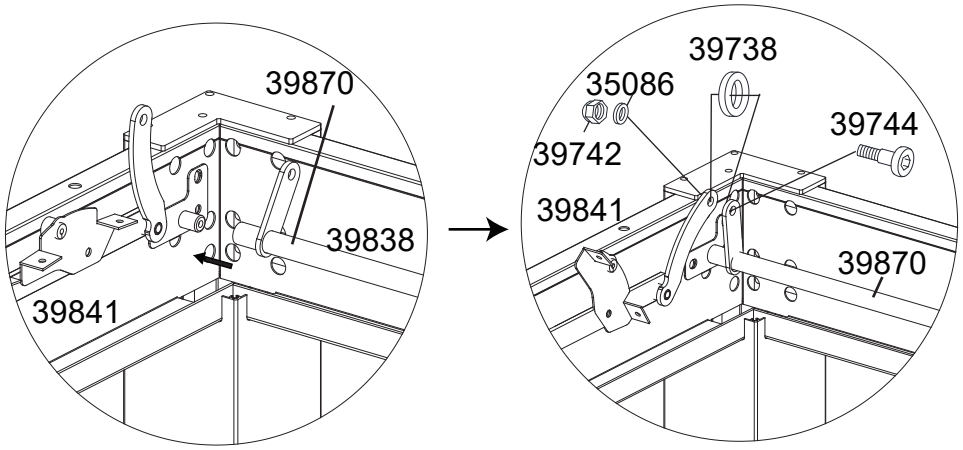

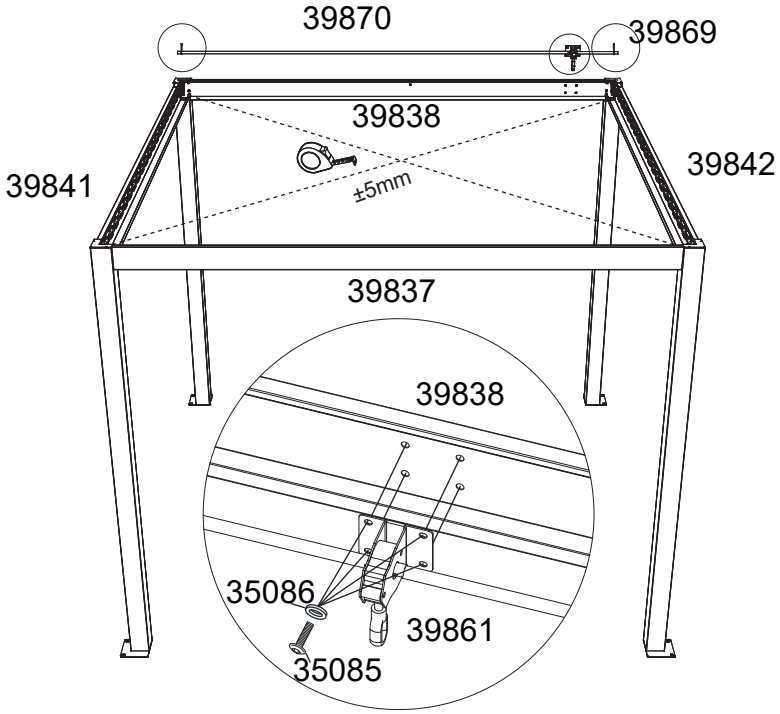

PG-L1-Q2 3 m x 3 m

7

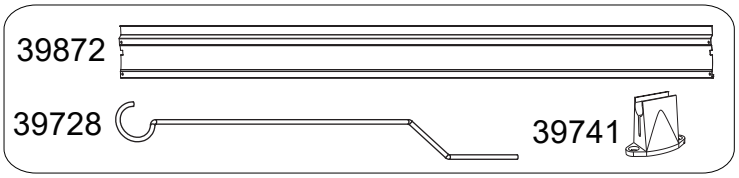

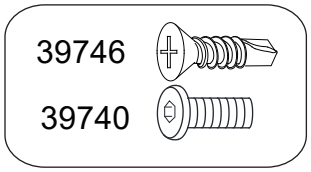

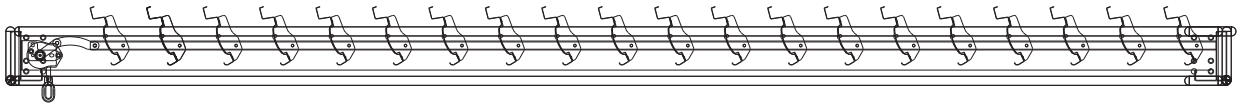

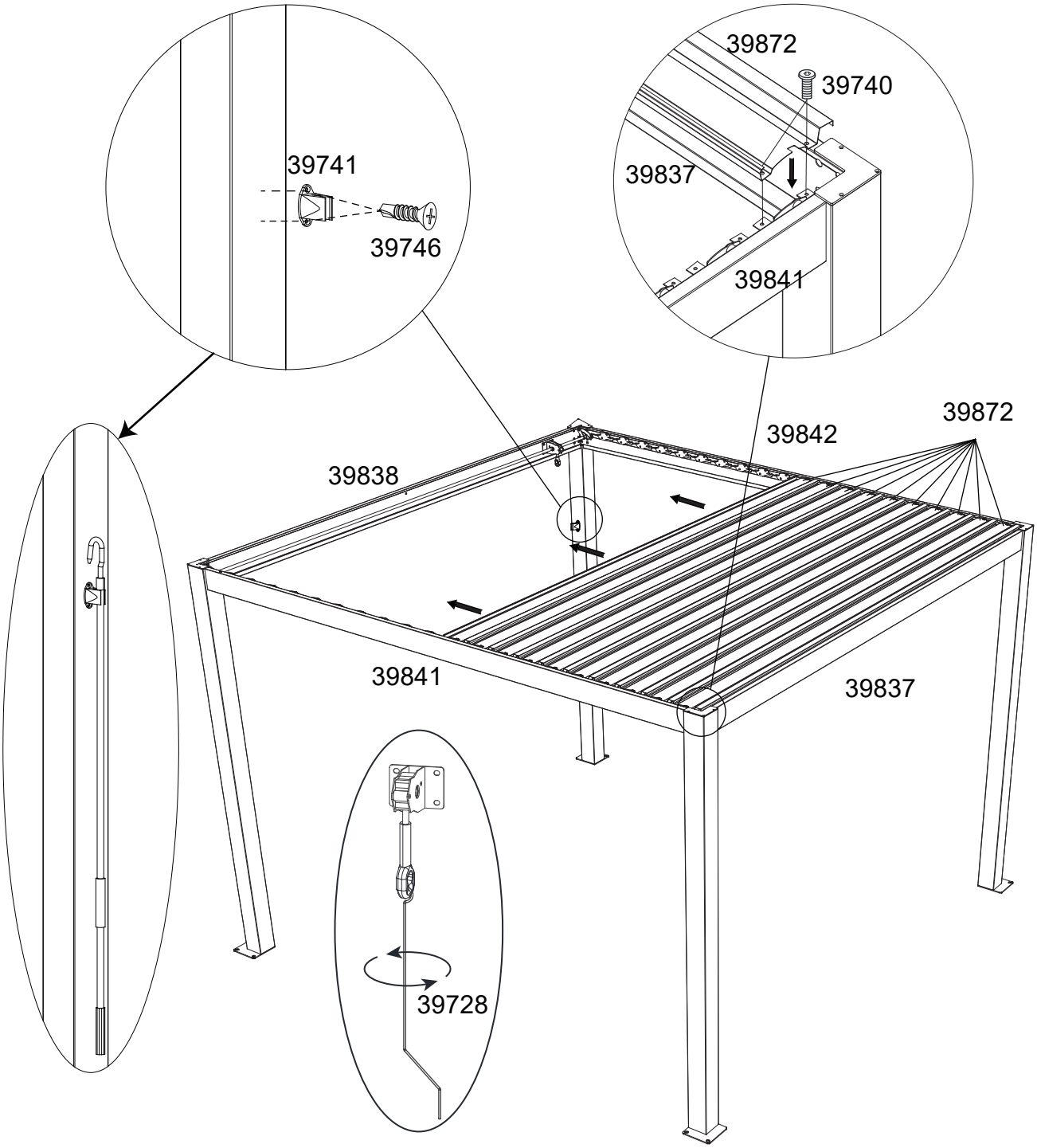

PG-L1-Q2 3 m x 3 m

8

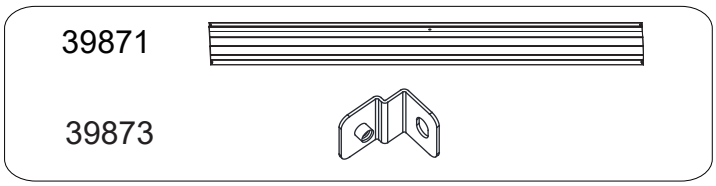

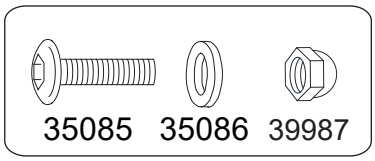

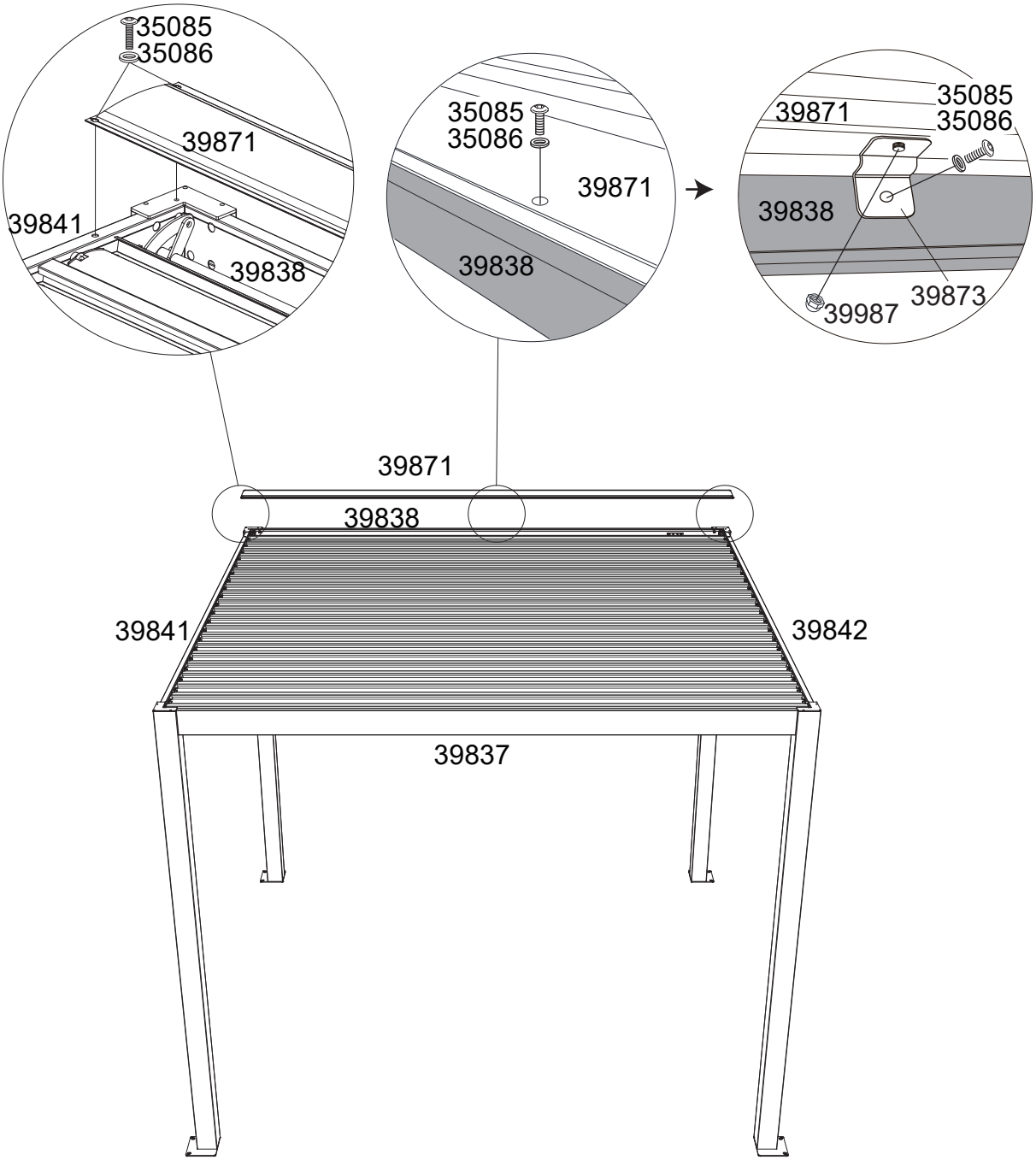

PG-L1-Q2 3 m x 3 m

9

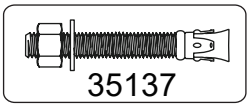

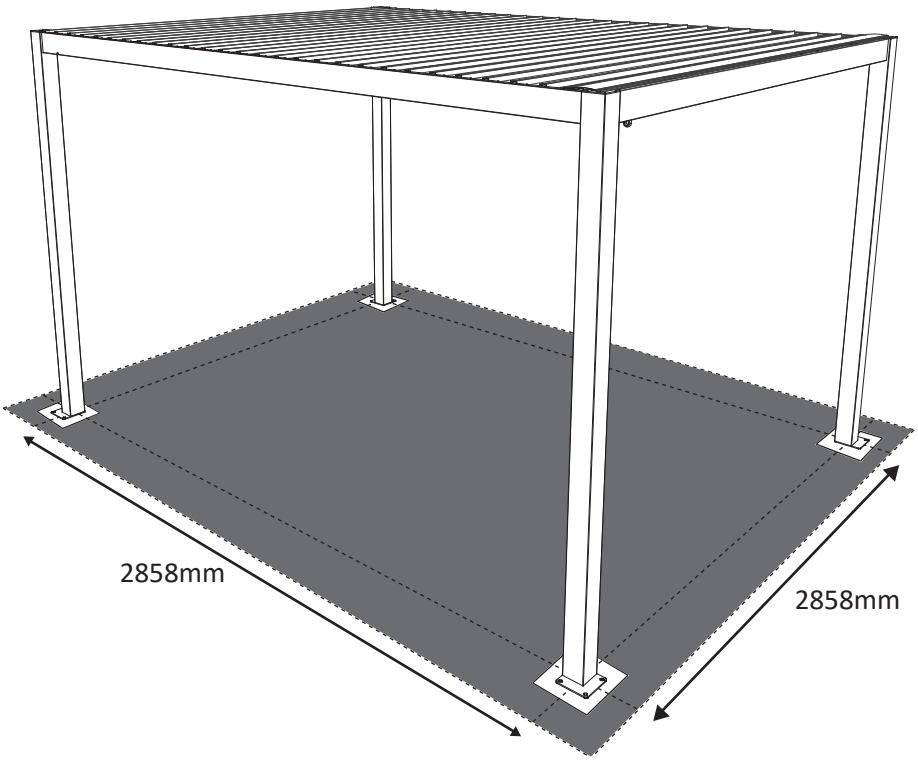

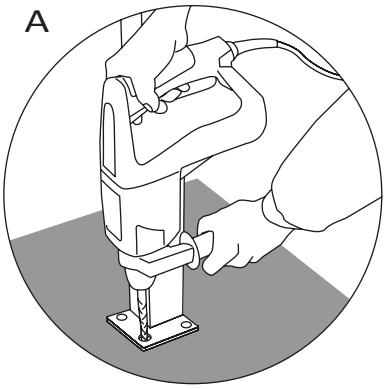

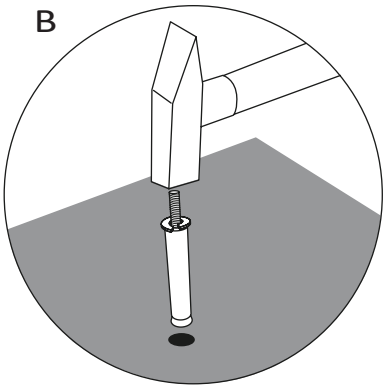

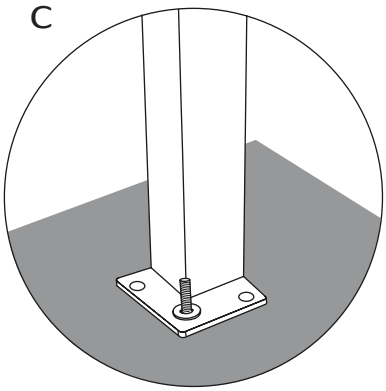

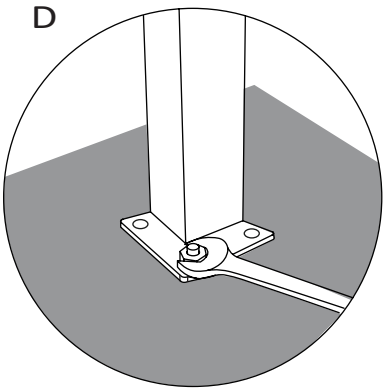

PG-L1-Q2 3 m x 3 m

10

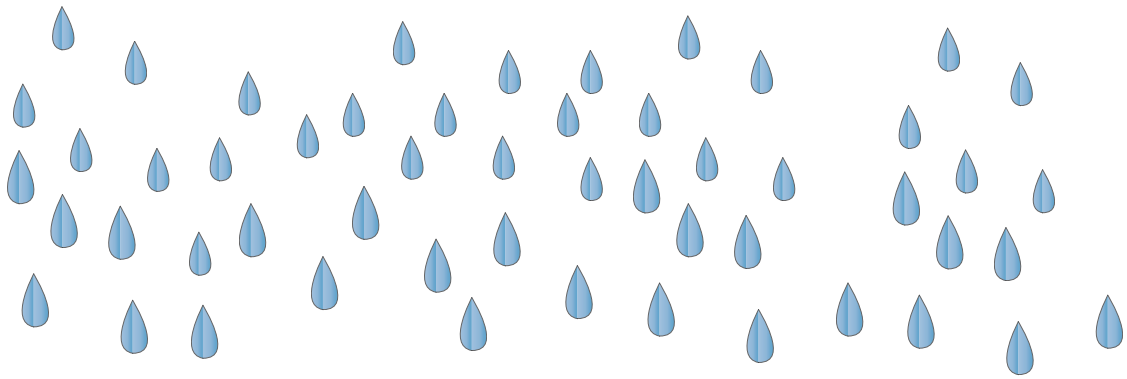

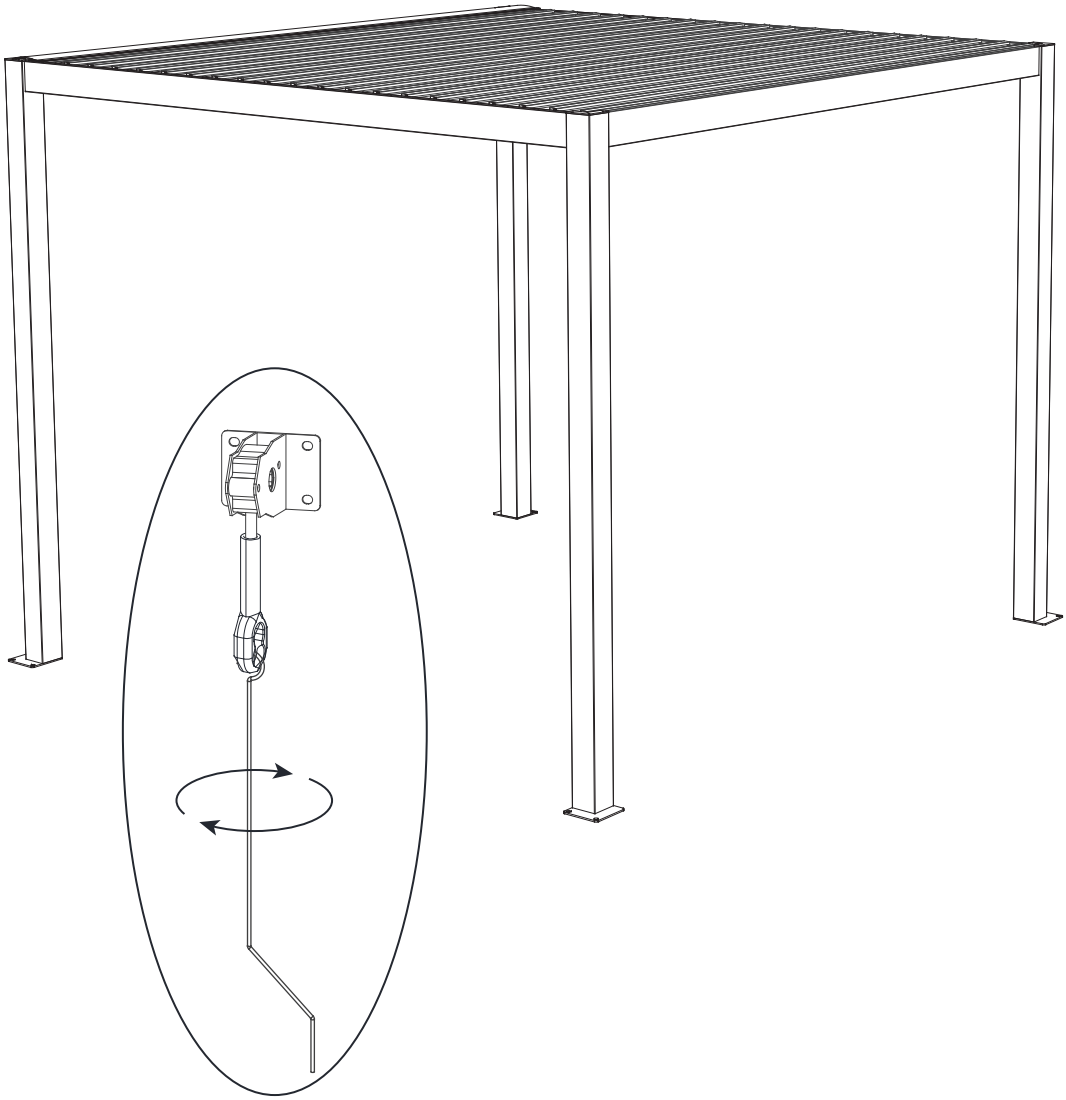

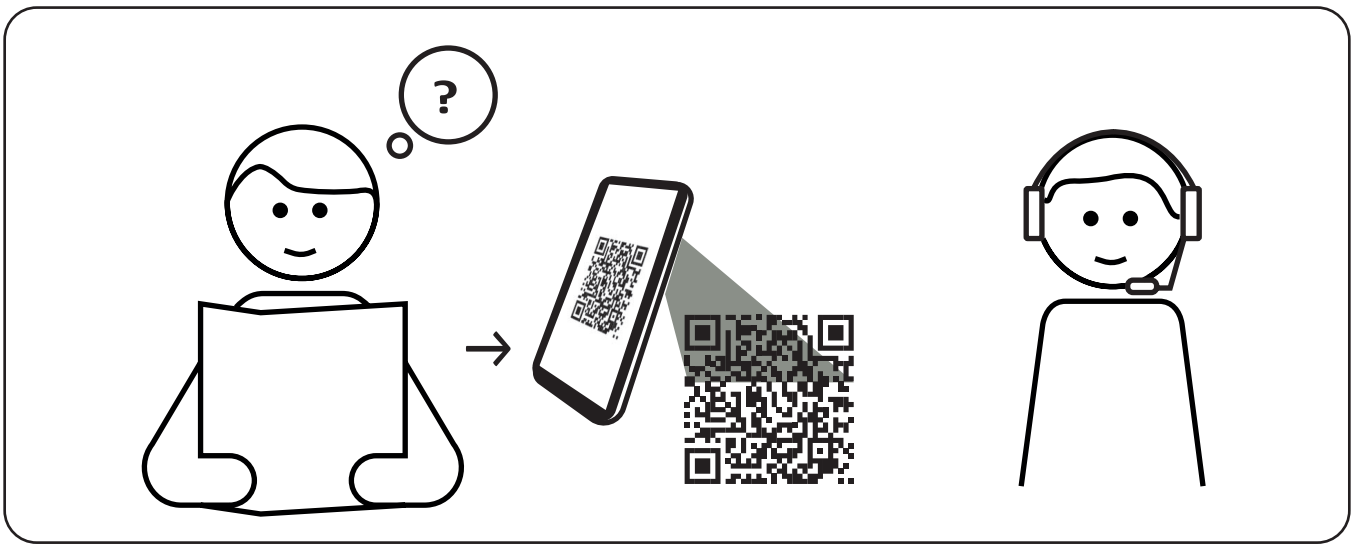

TOOLPORT GmbH • Gutenbergring 1–5 • 22848 Norderstedt • GERMANY
Telefon +49 (0)40 / 60 87 27 17 • Fax +49 (0)40 / 60 87 27 37 • www.toolport.de

GFP Handels GmbH • Passauerstraße 24 • A-4070 Eferding • AUSTRIA
Telefon +43 (0)7272/ 69 800 • www.gfp-international.com