**PG-L1-Q2** 3 m x 4 m



01/2024-V01

PRIMEYARD®

## **PG-L1-Q2** 3 m x 4 m

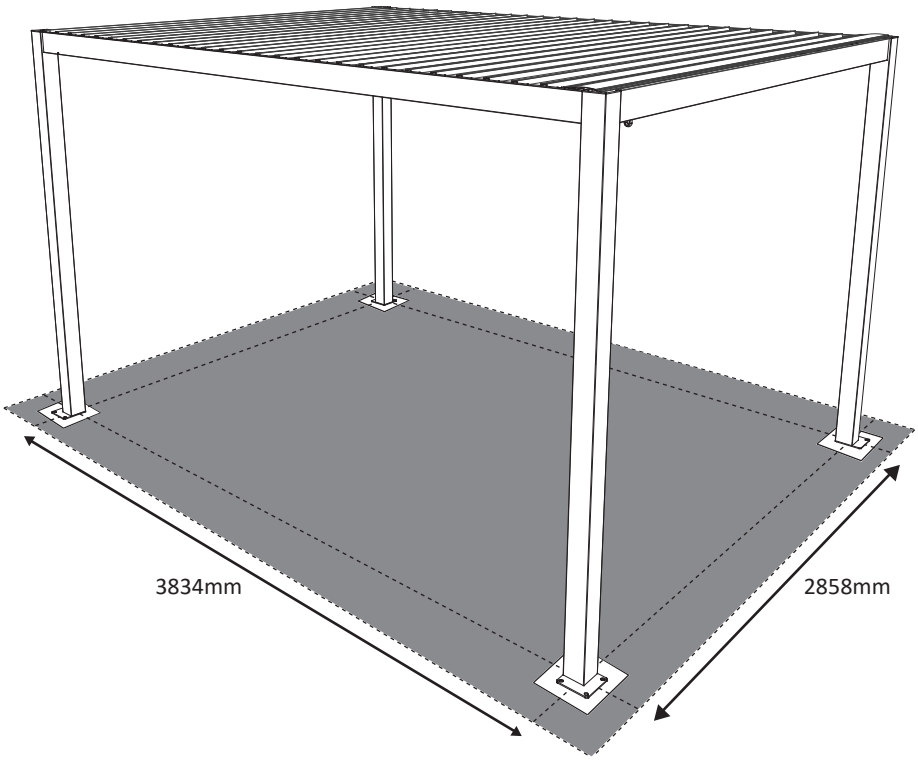


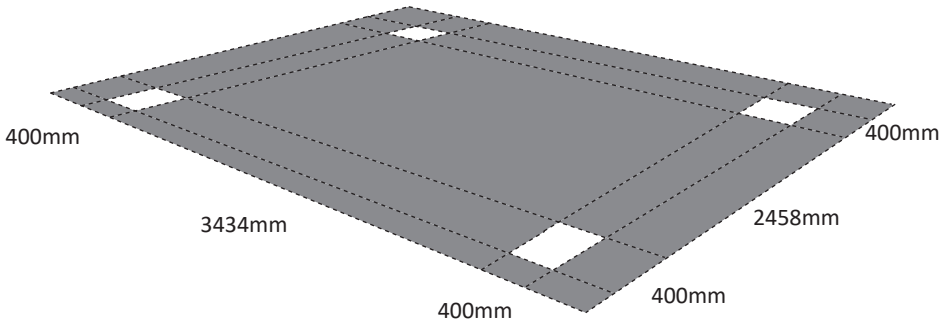


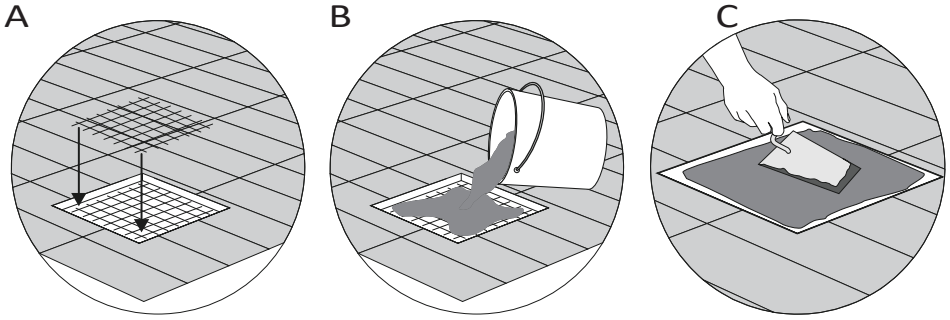

**PG-L1-Q2** 3 m x 4 m

A

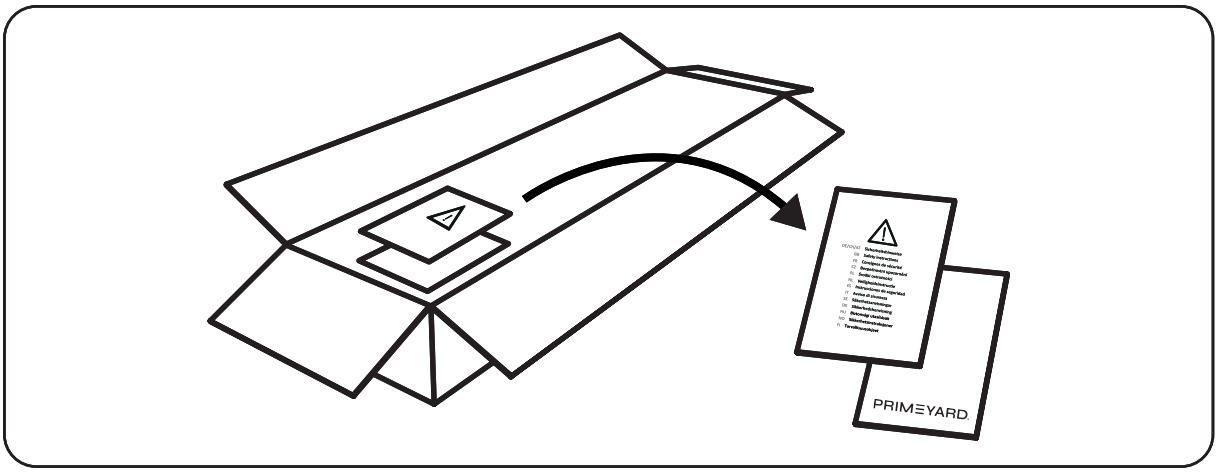


B

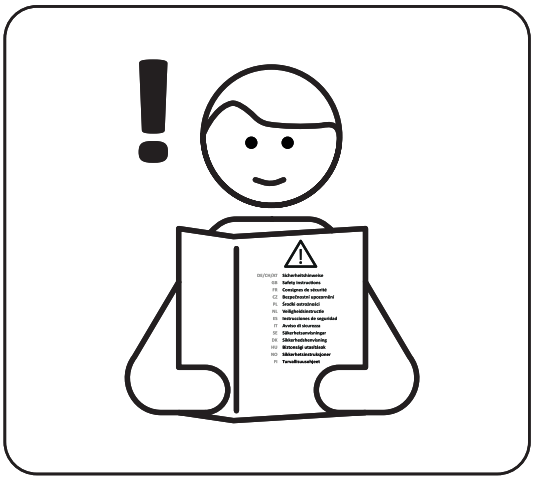

C

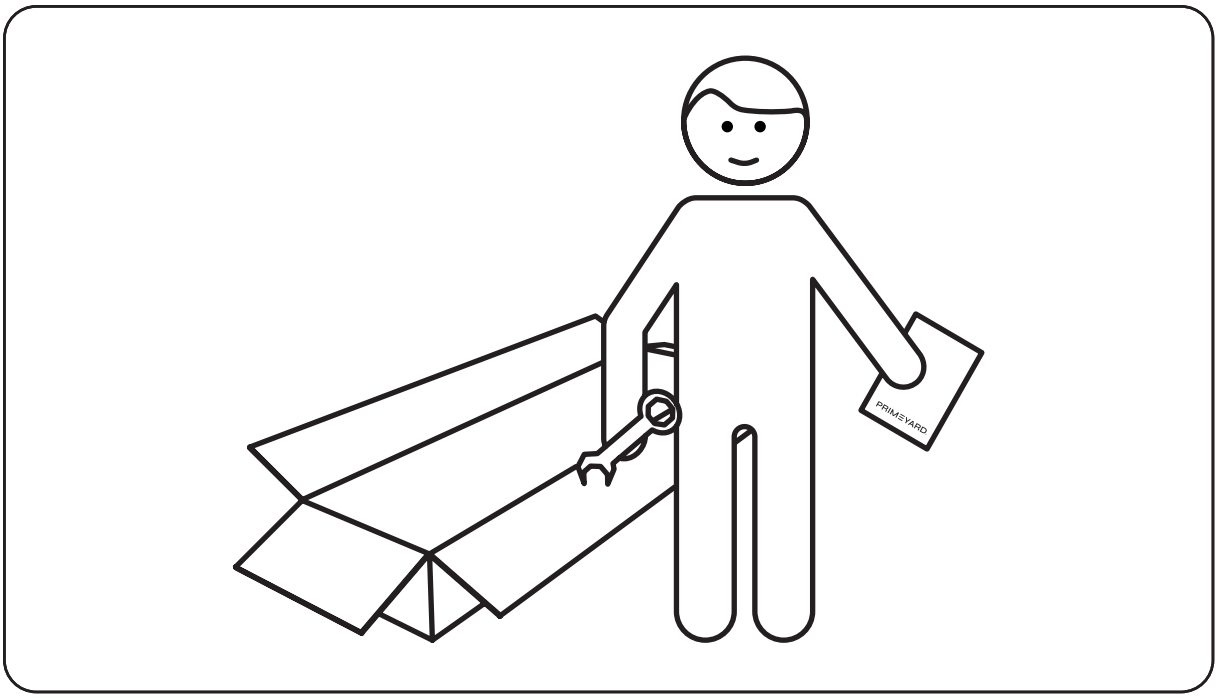

# **PG-L1-Q2** 3 m x 4 m

| Item no. | | Q'ty |
|---|---|---|
| 39747 | 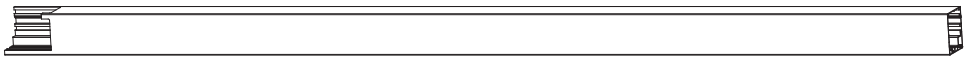 | 4 |
| 39748 | 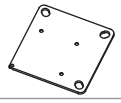 | 4 |
| 39763 |  | 1 |
| 39764 | 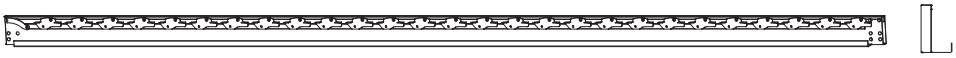 | 1 |
| 39749 |  | 1 |
| 39750 | 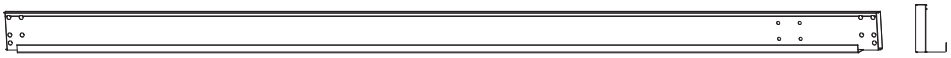 | 1 |
| 39729 |  | 1 |
| 39730 |  | 27 |
| 39753 | 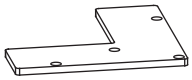 | 2 |
| 39754 | 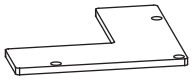 | 2 |
| 39725 | 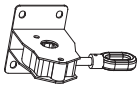 | 1 |
| 39726 |  | 1 |
| 39727 |  | 1 |
| 39728 |  | 1 |
| 39723 | 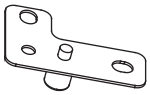 | 1 |
| 39724 | 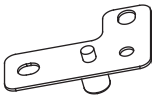 | 1 |

## **PG-L1-Q2** 3 m x 4 m

| Item no. | | Q'ty |
|---|---|---|
| 35085 | 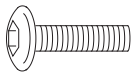 M6*15MM | 14 |
| 39743 | 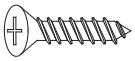 M5*25MM | 16 |
| 39744 | 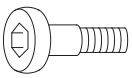 M6*10MM | 2 |
| 35137 |  | 12 |
| 39745 |  M5*15MM | 12 |
| 39742 |  M6 | 2 |
| 35086 |  M6 | 16 |
| 39738 |  M8 | 2 |
| 35144 | 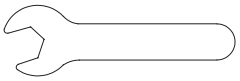 | 1 |
| 35146 |  | 1 |
| 35145 |  4# | 1 |
| 39715 |  3# | 1 |
| 39739 |  6# | 1 |
| 39740 | 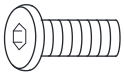 M5*8MM | 108 |
| 39741 |  | 1 |
| 39746 | 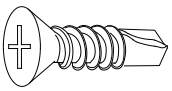 M4*15MM | 2 |

## **PG-L1-Q2** 3 m x 4 m

1

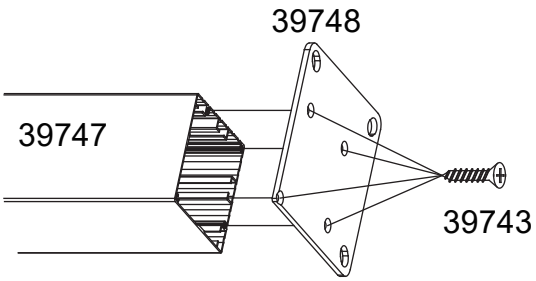


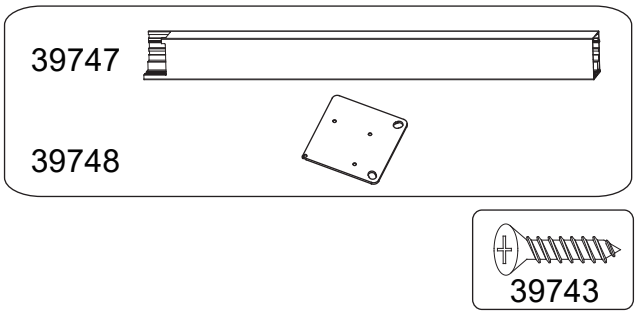





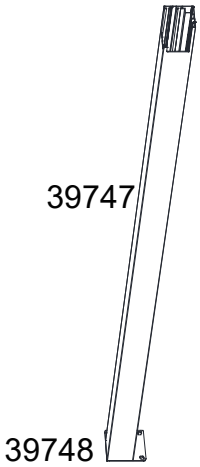


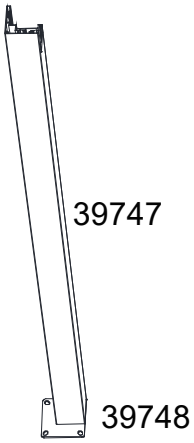


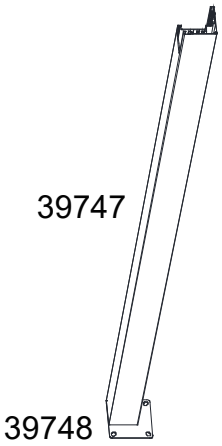

## **PG-L1-Q2** 3 m x 4 m

2

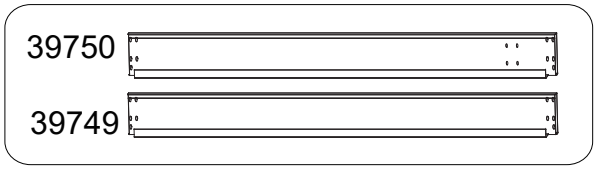


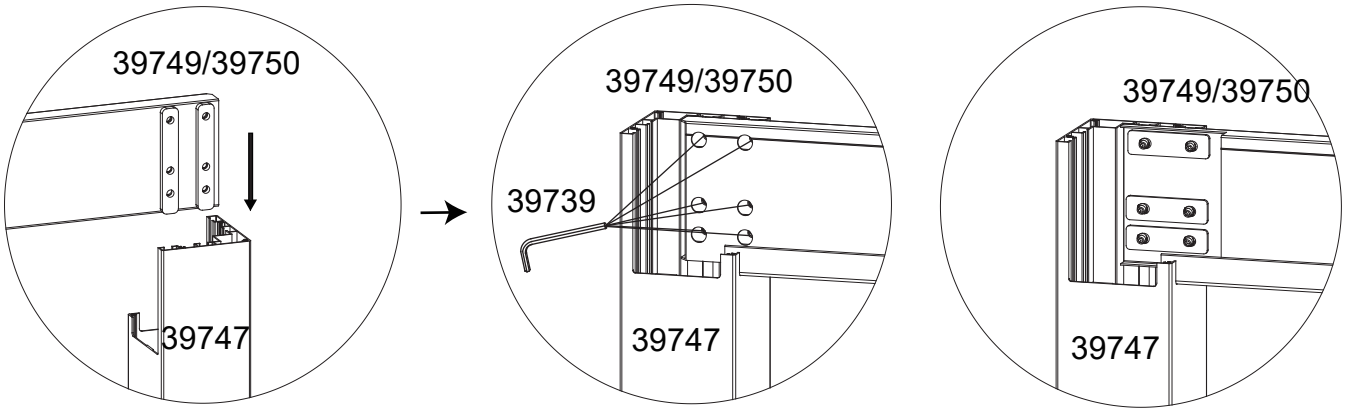


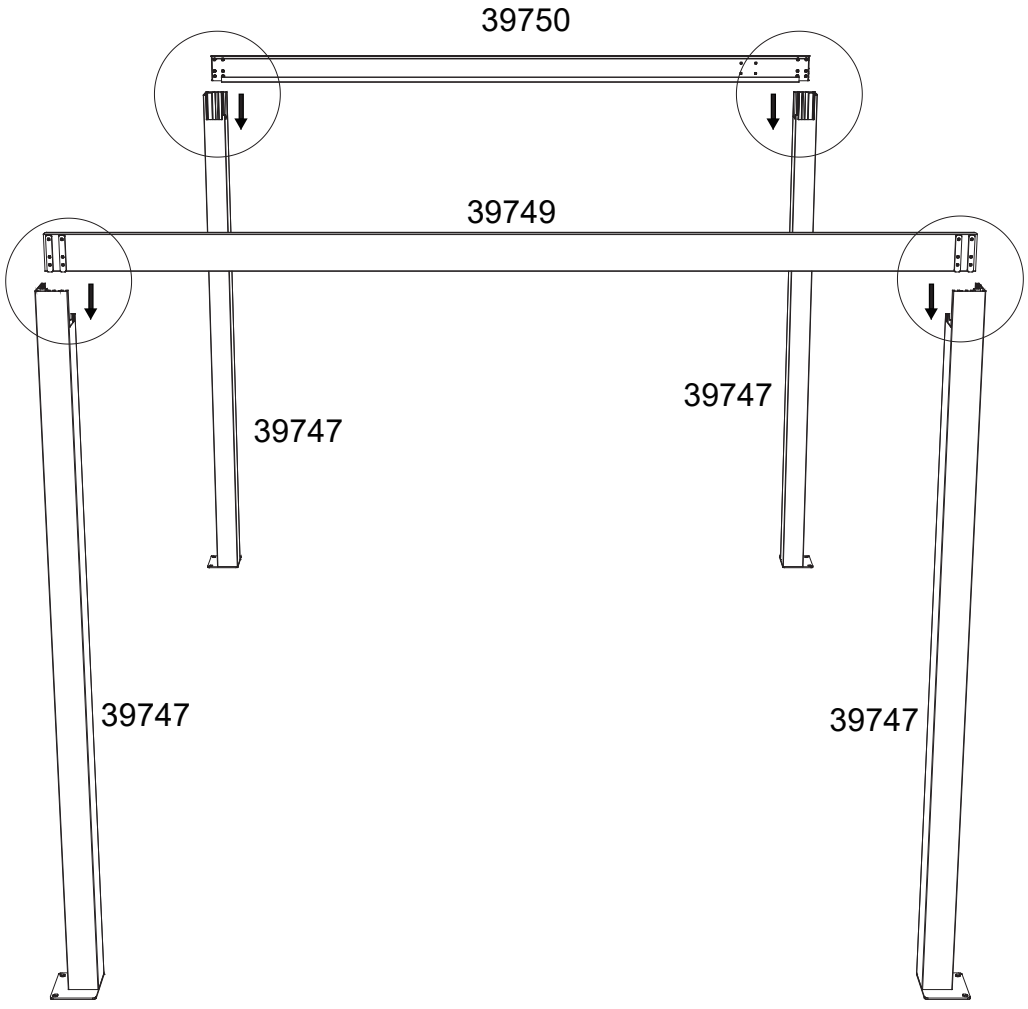

## **PG-L1-Q2** 3 m x 4 m

3

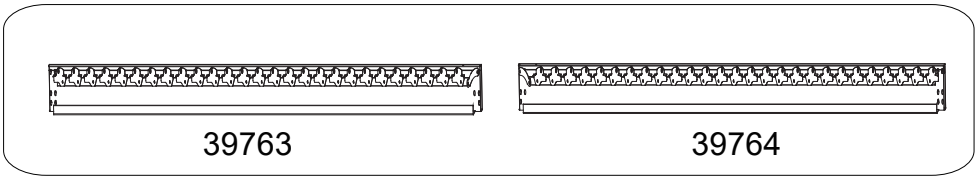


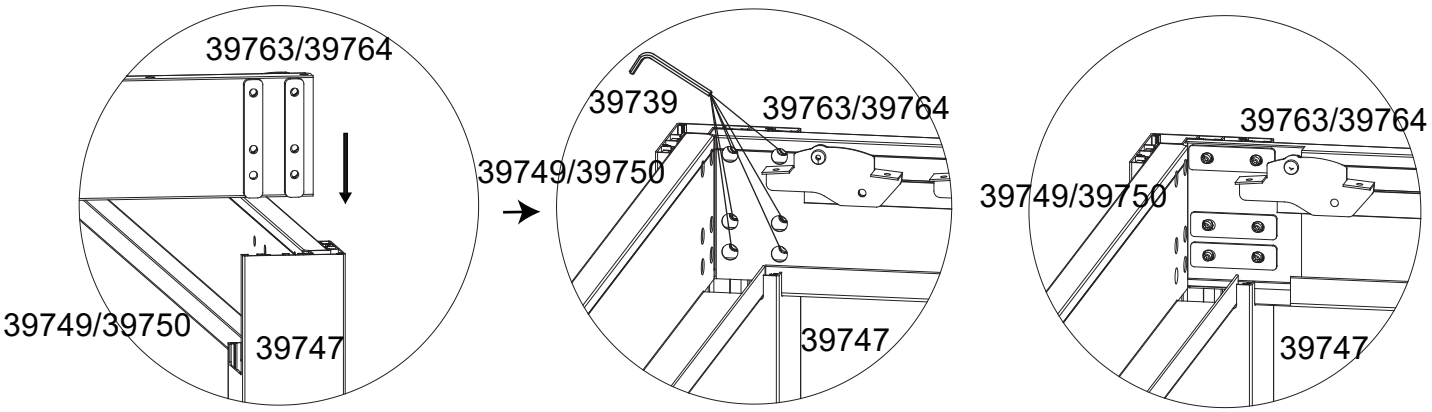


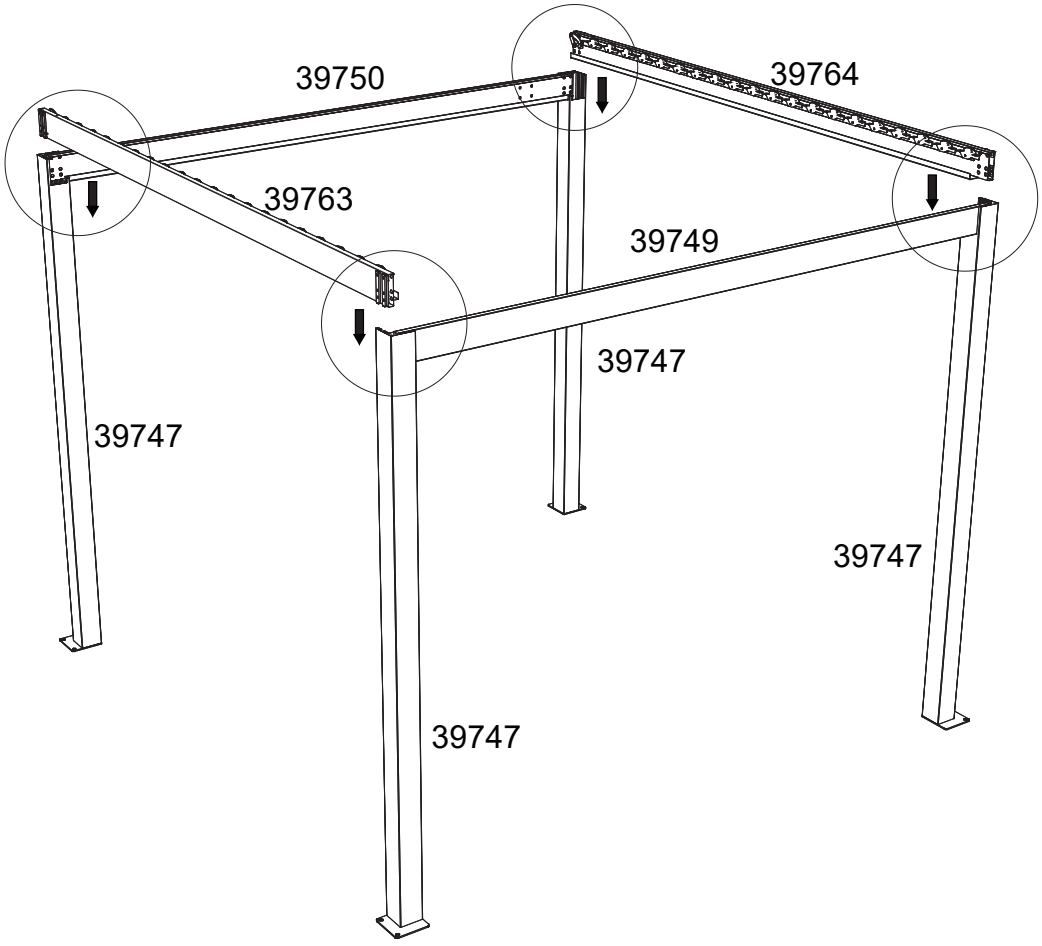

## **PG-L1-Q2** 3 m x 4 m

4

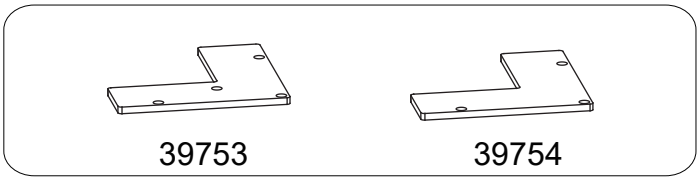


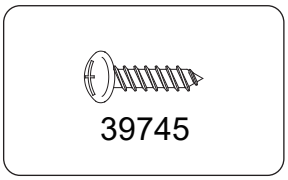


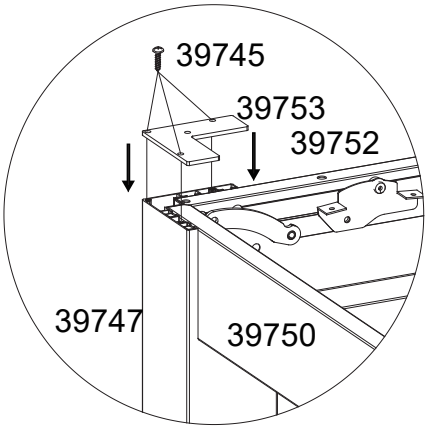


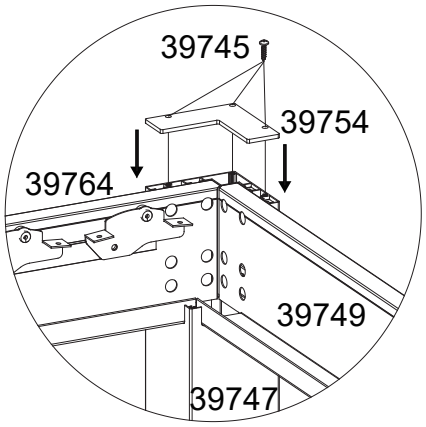


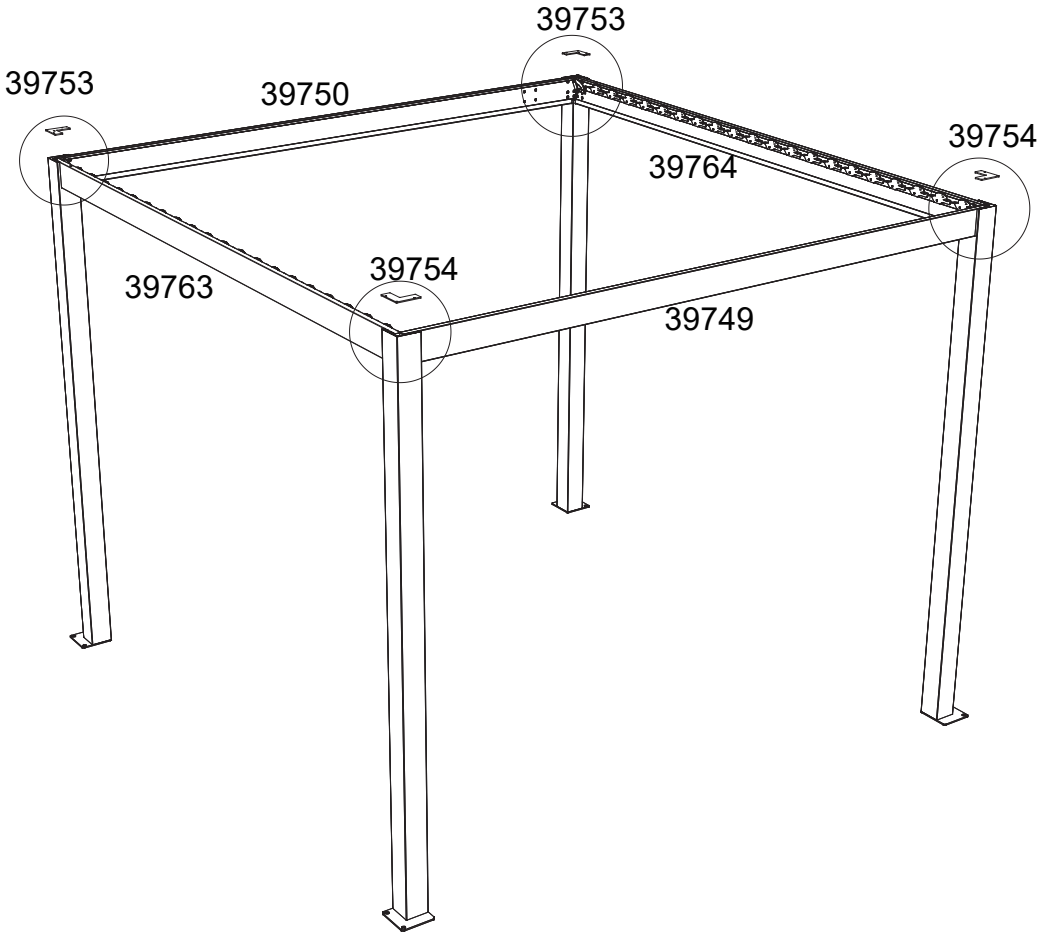

## **PG-L1-Q2** 3 m x 4 m

5

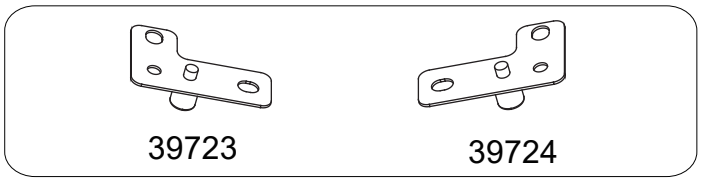


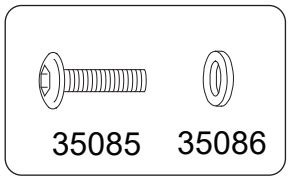


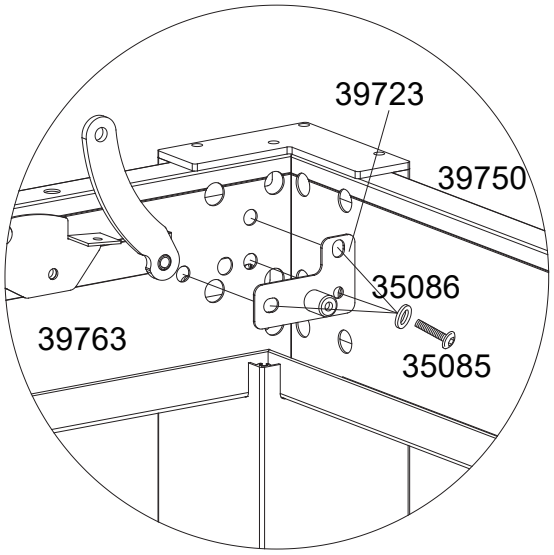


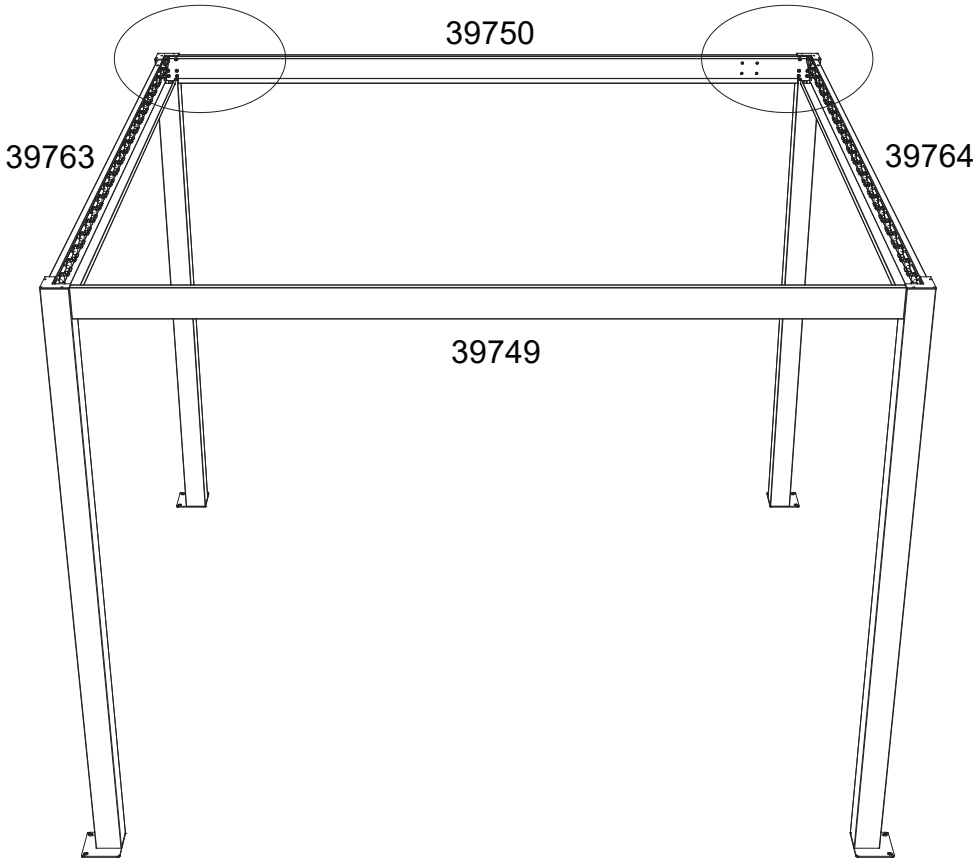

## **PG-L1-Q2** 3 m x 4 m

6

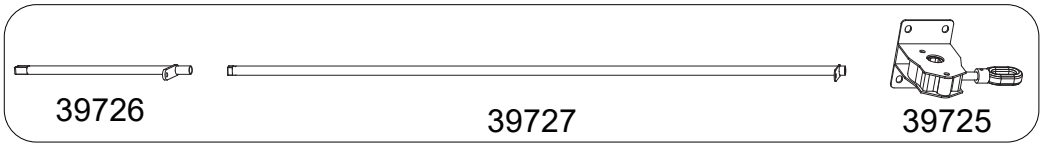


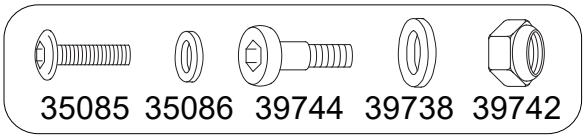


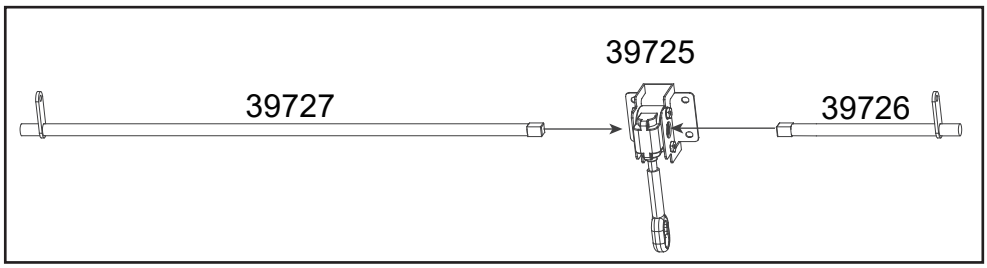


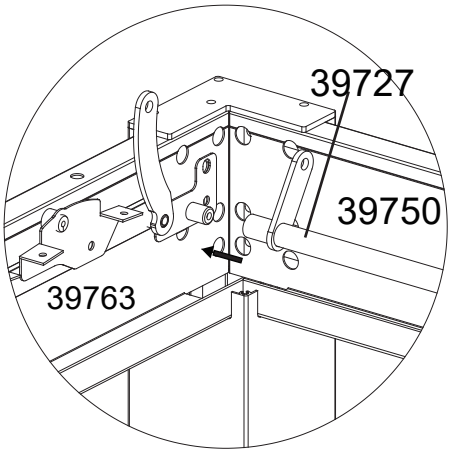


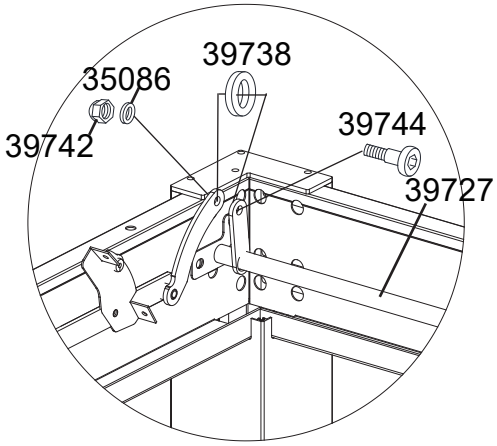


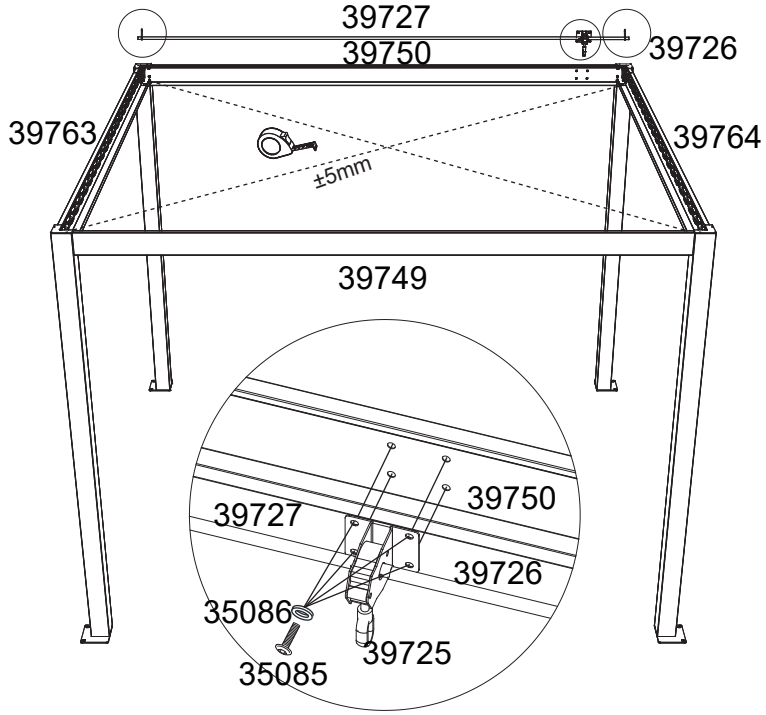

**PG-L1-Q2** 3 m x 4 m

7

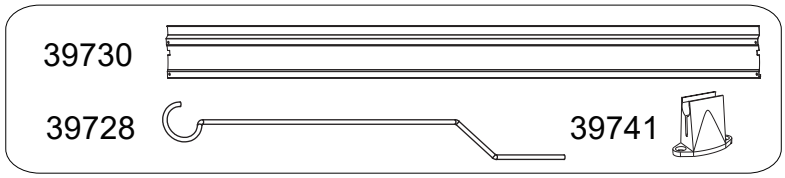


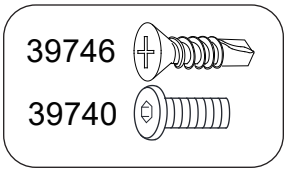


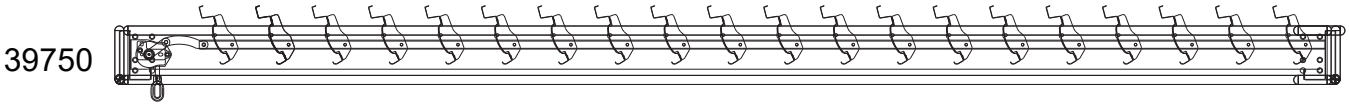


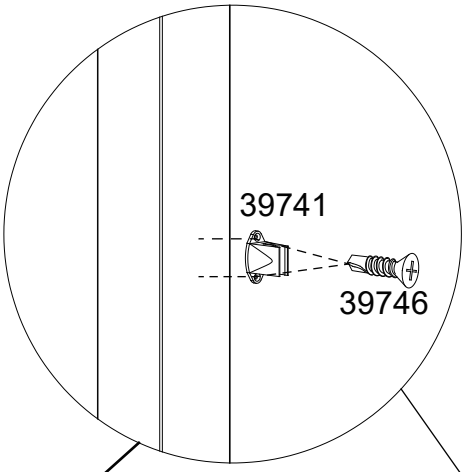


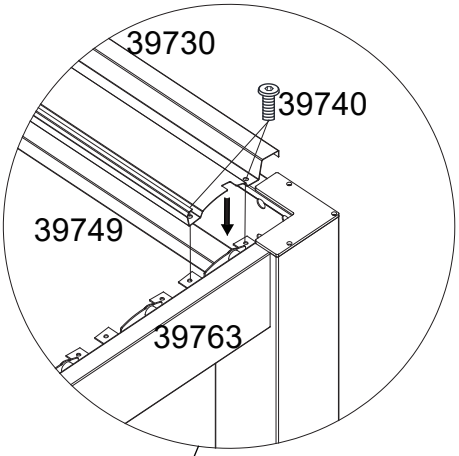


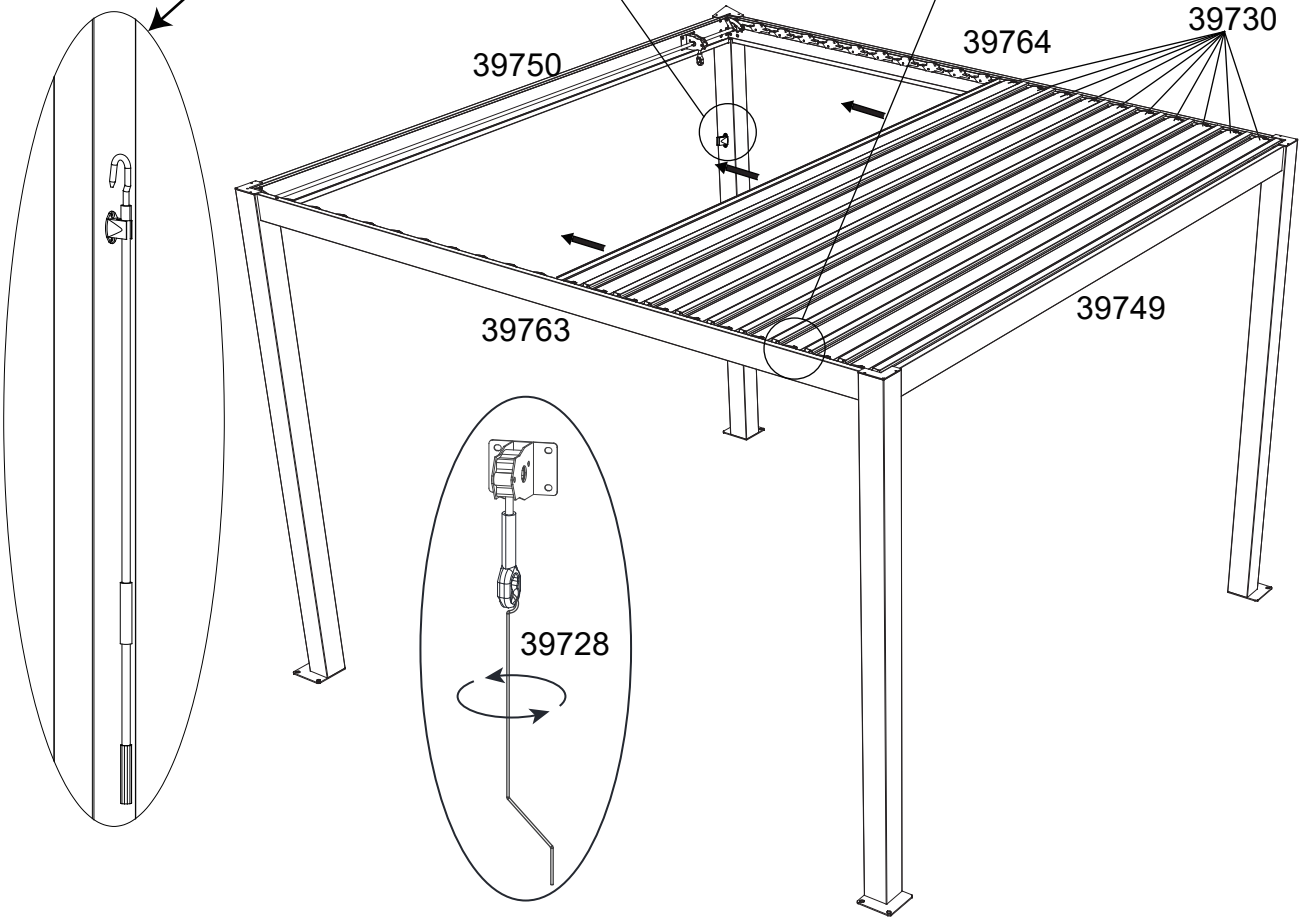

## **PG-L1-Q2** 3 m x 4 m

8

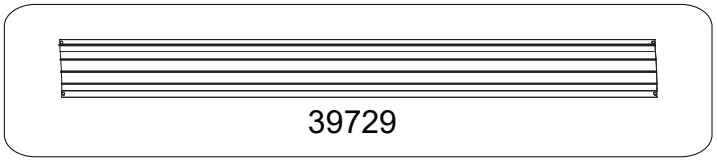


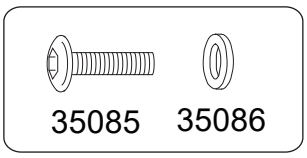


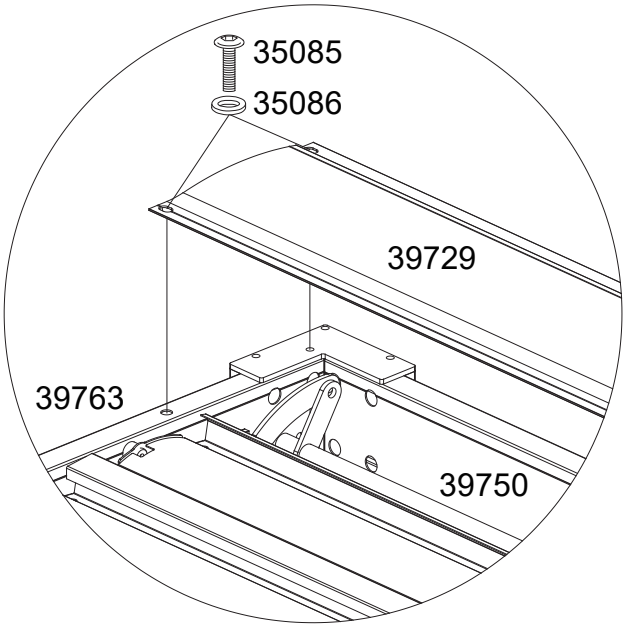


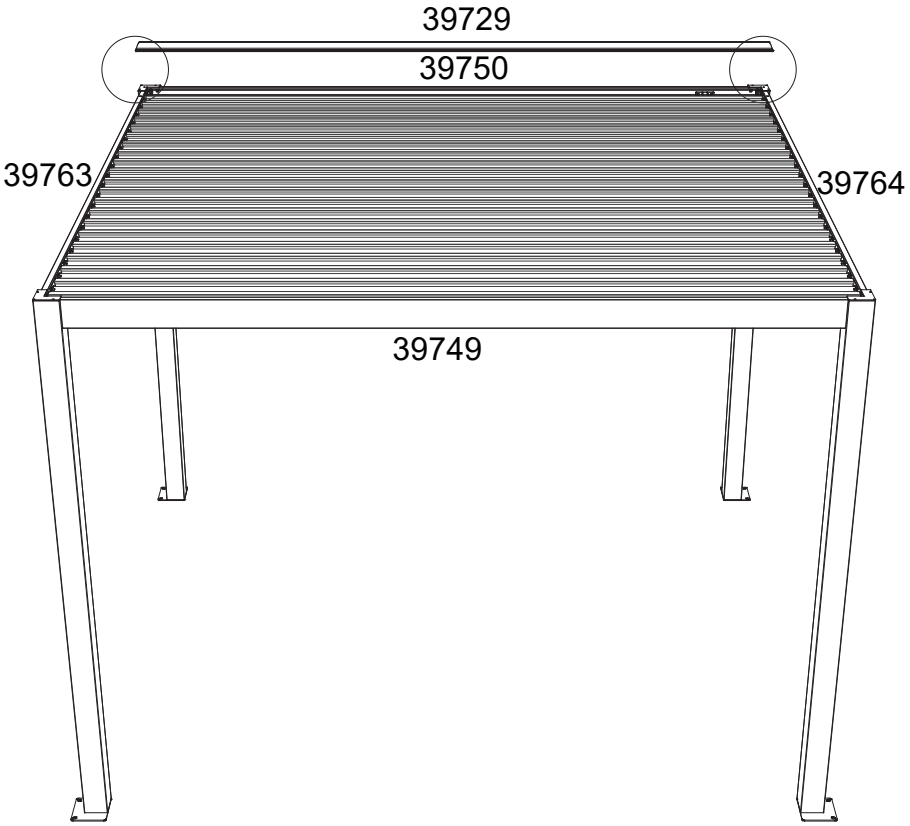

## **PG-L1-Q2** 3 m x 4 m

9

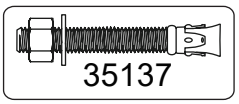


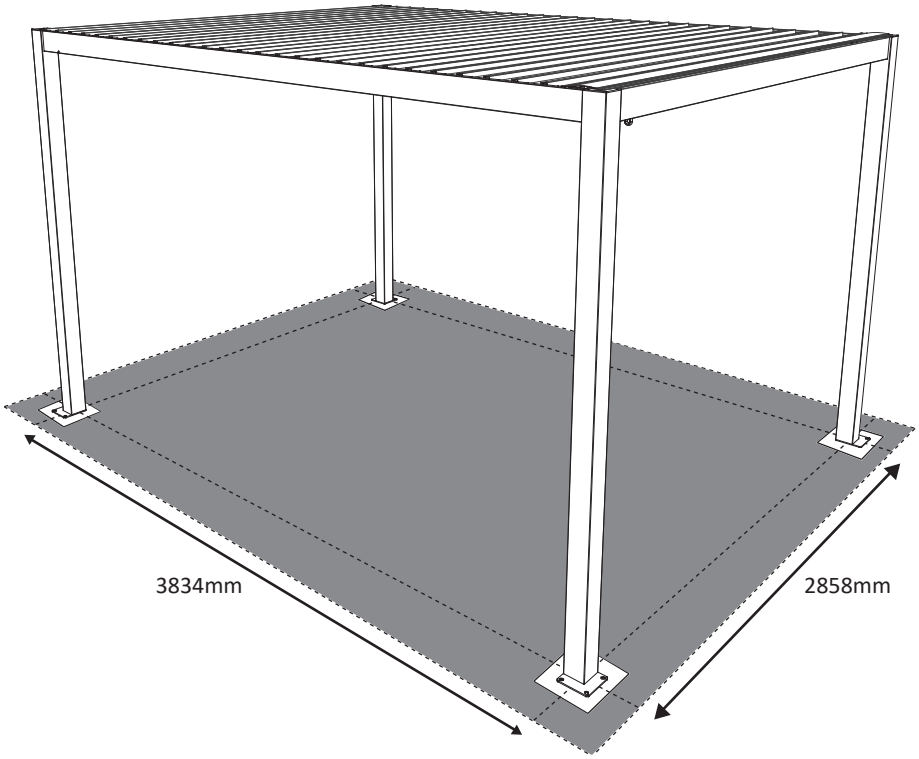


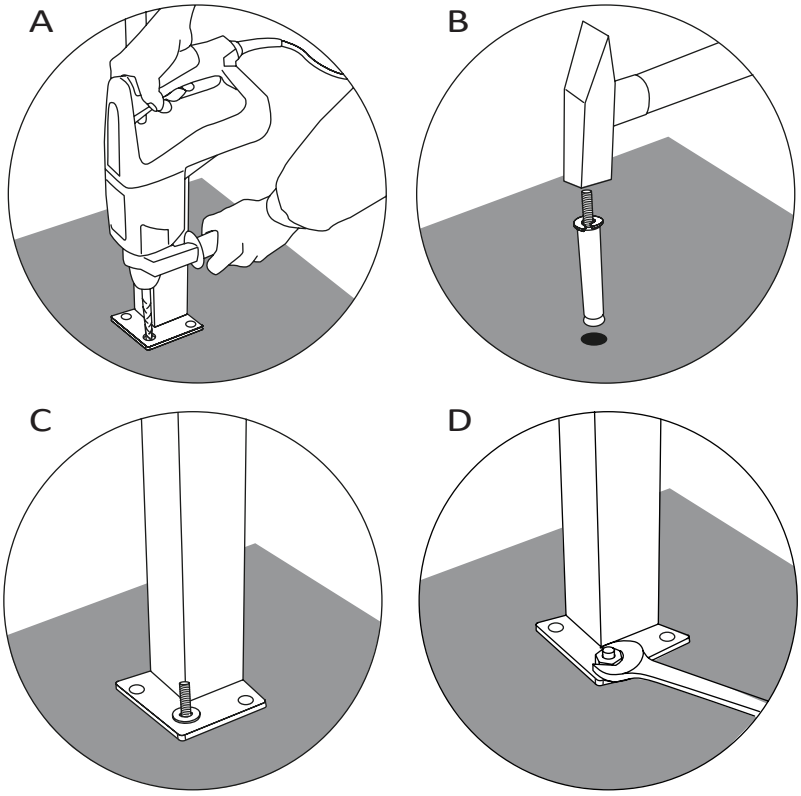

**PG-L1-Q2** 3 m x 4 m

10

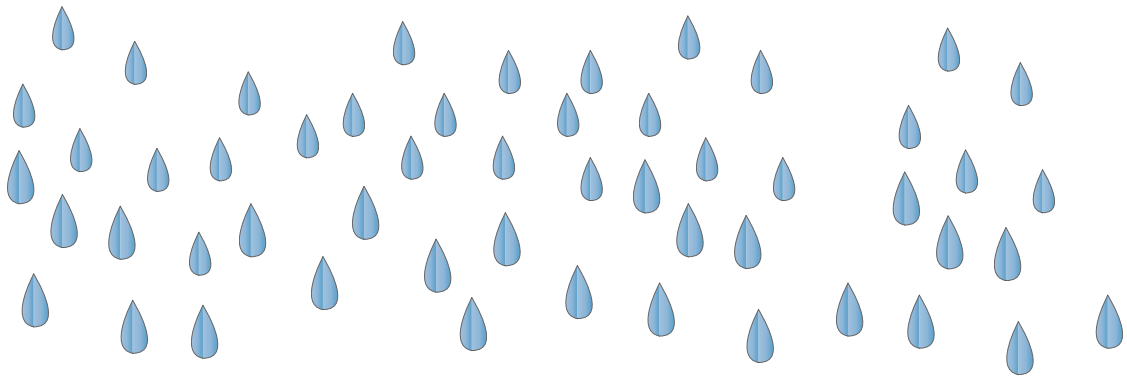

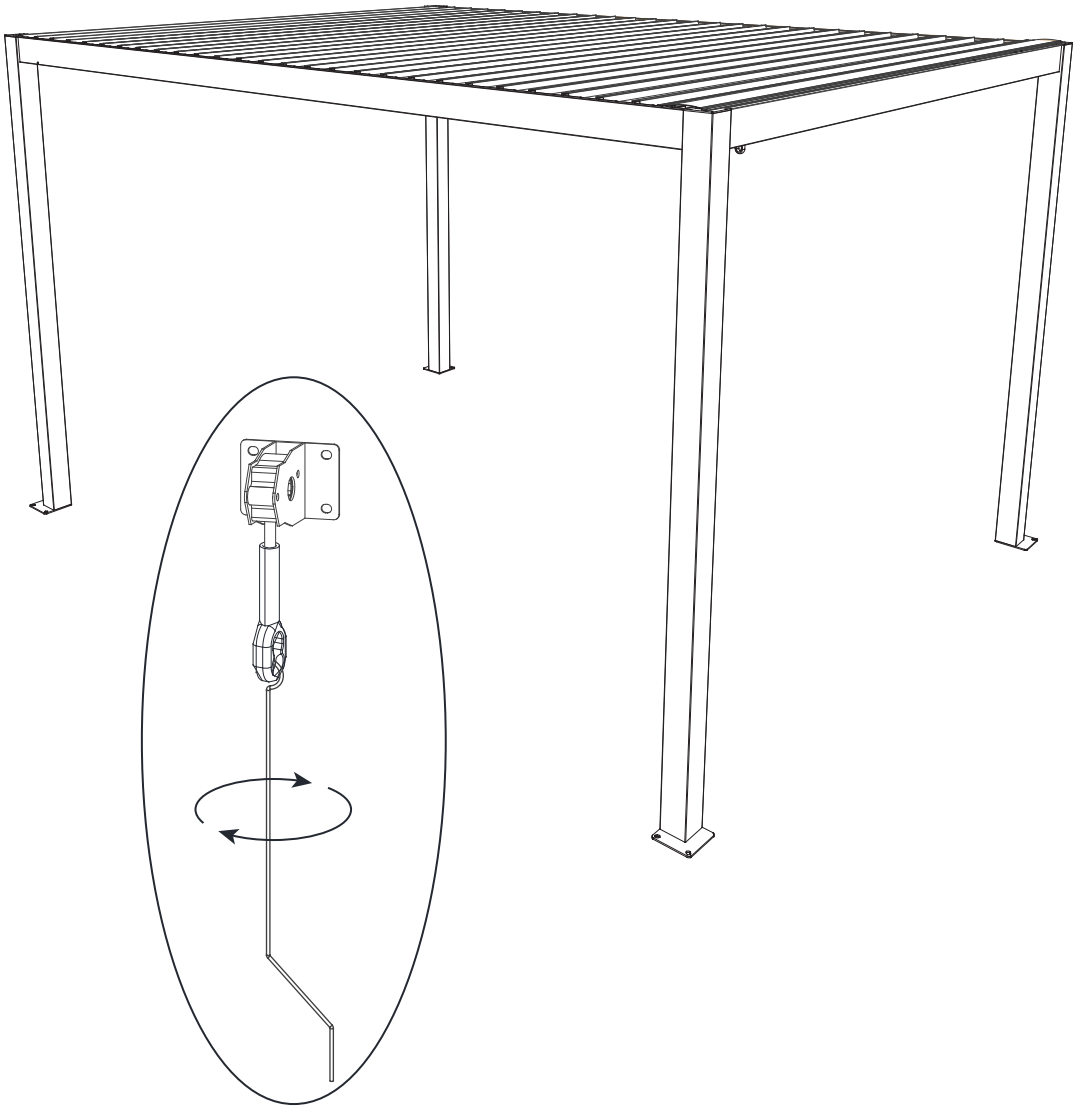

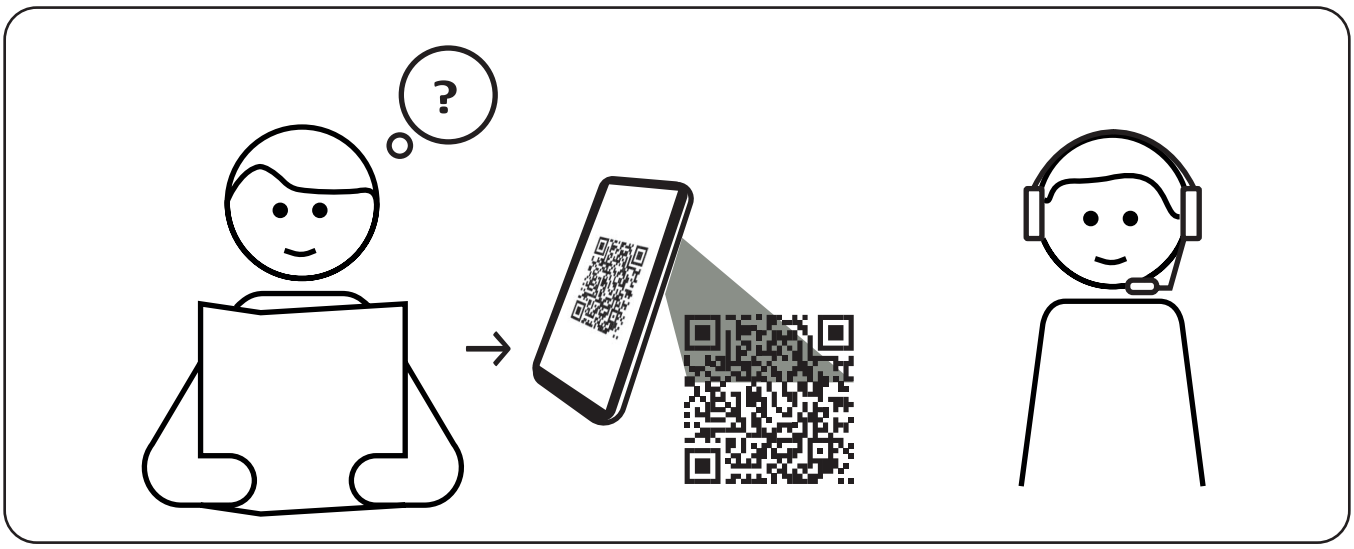


**TOOLPORT GmbH** • Gutenbergring 1–5 • 22848 Norderstedt • GERMANY
Telefon +49 (0)40 / 60 87 27 17 • Fax +49 (0)40 / 60 87 27 37 • www.toolport.de

**GFP Handels GmbH** • Passauerstraße 24 • A-4070 Eferding • AUSTRIA
Telefon +43 (0)7272/ 69 800 • www.gfp-international.com